Show/Hide Bookmarks

EDS9300UER
00412739

Lenze

Manual

Global Drive

9300 Servo register controller

Contents
Preface and general information
Safety information
Technical data
Installation
Commissioning
During operation
Configuration
Code table
Troubleshooting and fault elimination
Maintenance
Network of several drives
Application of brake units
Automation
Accessories and Motors
Help for selection
Application examples
Signal-flow charts
Glossary
Table of keywords

Contents of the Manual 9300						
Part	Contents	**Planning**	**Servo Inverter**	**Servo Position Controller**	**Servo Cam**	**Servo Register Control**
A	**Table of contents** **Preface and general information**	●	●	●	●	●
	Safety information					
B	**Technical data**	●	●	●	●	●
	Installation					
C	**Commissioning** **During operation**		●	●	●	●
	– Manual Oscilloscope function					
D	**Configuration**		D1.1	D2.1	D3.1	D4.1
	Code table		D1.2	D2.2	D3.2	D4.2
E	**Troubleshooting and fault elimination** **Maintenance**		●	●	●	●
F	**DC bus connection of several drives** – Operating Instructions 9340 regenerative power supply	●				
G	**Application of brake units** – Operating Instructions 9350 brake unit	●				
H	**Automation** – Automation with system bus (CAN)	●				
	– Operating Instructions Fieldbus module 2102 (RS232/RS485)	●				
	– Operating Instructions Fieldbus module 2111 (INTERBUS)	●				
	– Operating Instructions Fieldbus module 2131 (PROFIBUS)	●				
	– Flyer PC software Global Drive Control	●				
I	**Accessories and motors**	●				
K	**Drive selection**	●				
	Application examples		●	●	●	●
L	**Signal flow charts**		●	●	●	●
M	**Glossary** **Table of keywords**	●	●	●	●	●

Explanation of symbols: ● part of the corresponding Manual

All documentation listed here contains a type designation and a material number at the top left edge.

The features and data specified in your Manual correspond to the controller version at the time of printing (print date: see inside cover of the parts). Lenze strives to keep all information up to the state of the latest controller version. If you should still find differences to your Manual, we kindly ask you to refer to the Operating Instructions included in the scope of supply or to contact your Lenze representative directly.

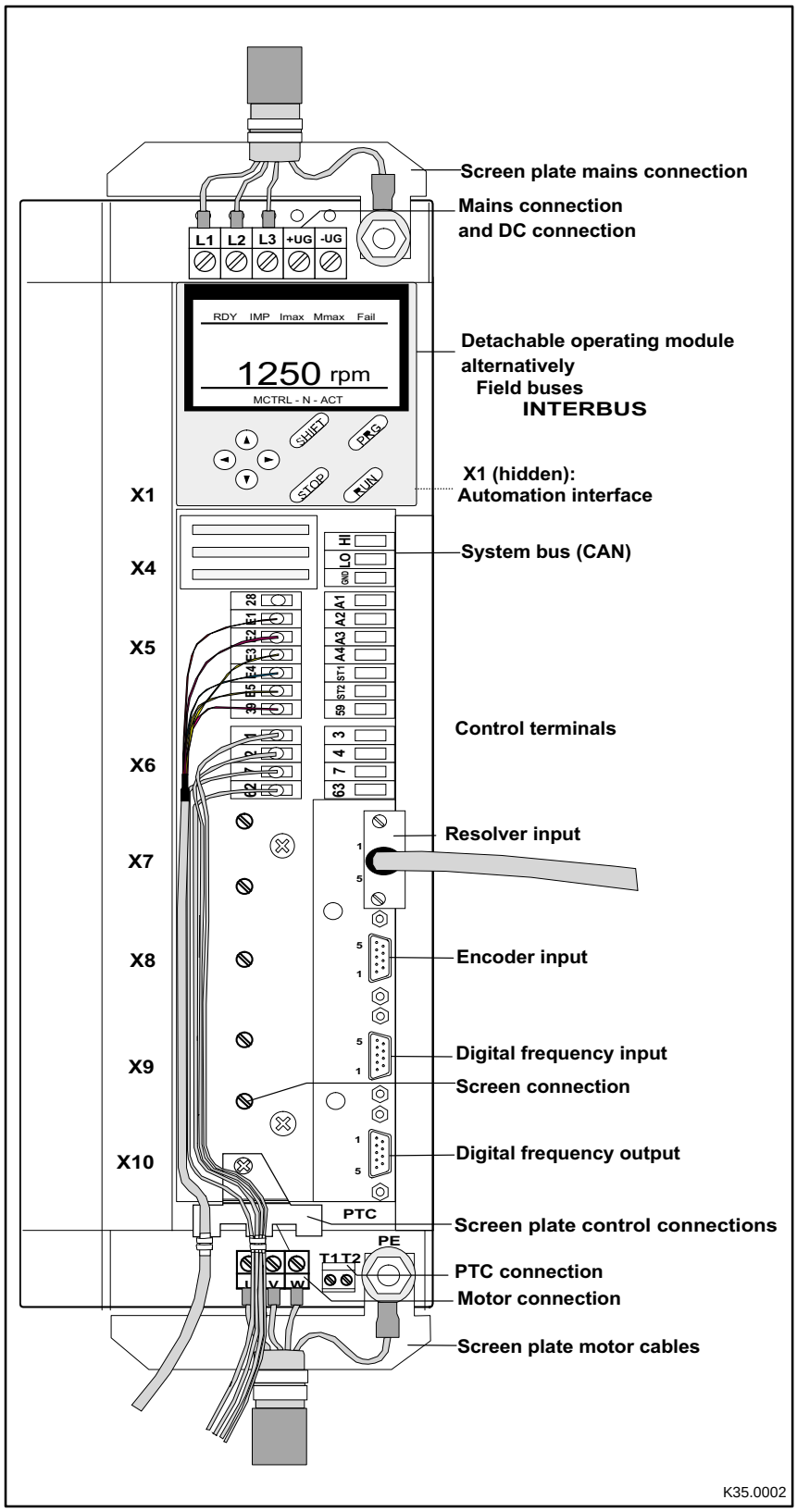
Screen plate mains connection
Mains connection
and DC connection
L1
L2
L3
+UG
-UG
RDY IMP Imax Mmax Fail
1250 rpm
MCTRL - N - ACT
SHIFT
PRG
STOP
RUN
Detachable operating module
alternatively
Field buses
INTERBUS
X1 (hidden):
Automation interface
X1
X4
X5
X6
X7
X8
X9
X10
HI
LO
GND
System bus (CAN)
Control terminals
Resolver input
Encoder input
Digital frequency input
Screen connection
Digital frequency output
PTC
PE
T1 T2
Screen plate control connections
PTC connection
Motor connection
Screen plate motor cables
K35.0002

Show/Hide Bookmarks

EDS9300-RA
00412729

Lenze

Manual
Part A

Table of contents

Preface and general information

Global Drive

Servo register controller 9300

This documentation is valid for the servo register controllers 9300 as of version:

33.932X	ER	2G	1x	(9321 - 9329)
33.933X	ER	2G	1x	(9330 - 9332)
33.932X	CR	2G	1x	Cold Plate (9321 - 9328)

Type

Desgin:
E = Enclosure IP20
C = Cold Plate
xK = Cam profiler
xP = Position controller
xR = Register controller
xS = Servo inverter

Hardware level and index

Software level and index

Variant

Explanation

© 1999 Lenze GmbH & Co KG

Without written approval of Lenze Lenze GmbH & Co KG no part of these Instructions must be copied or given to third parties.

All indications given in these Operating instructions have been selected carefully and comply with the hardware and software described. Nevertheless, deviations cannot be ruled out. We do not take any responsibility or liability for damages which might possibly occur. Required corrections will be made in the following editions.

Version 1.0 12/99

Contents

Part A

1 Preface and general information 1-1

1.1 How to use this Manual 1-1
1.1.1 Terminology used 1-1
1.1.2 What is new? 1-1
1.2 Legal regulationns 1-2
1.3 EC directives/Declaration of conformity 1-3
1.3.1 What is the purpose of EC directives? 1-3
1.3.2 What does the CE mark imply? 1-3
1.3.3 EC Low-Voltage Directive 1-4
1.3.3.1 EC Declaration of Conformity ’95 1-4
1.3.4 EC Directive Electromagnetic Compatibility 1-5
1.3.4.1 EC Declaration of Conformity ’95 1-6
1.3.5 EC Machinery Directive 1-8
1.3.5.1 EC Manufacturer’s Declaration 1-8

2 Safety information

See Operating Instructions

Contents

Part B

3 Technical data 3-1

3.1 Features 3-1

3.2 General data/Operating conditions 3-2

3.3 Rated data 3-3

3.3.1 Types 9321 to 9325 3-3

3.3.2 Types 9326 to 9332 3-4

3.3.3 Fuses and cable cross-sections 3-5

3.3.4 Mains filter 3-6

3.4 Dimensions 3-6

4 Installation 4-1

4.1 Mechanical installation 4-1

4.1.1 Important notes 4-1

4.1.2 Standard assembly with fixing rails or fixing brackets 4-2

4.1.3 Assembly with thermally separated power stage (”push-through technique”)..... 4-3

4.1.4 Assembly of variants 4-6

4.2 Electrical installation 4-9

4.2.1 Protection of persons 4-9

4.2.1.1 Residual-current circuit breakers 4-9

4.2.1.2 Insulation 4-10

4.2.1.3 Replacement of defective fuses 4-10

4.2.1.4 Mains disconnection 4-10

4.2.2 Protection of the controller 4-11

4.2.3 Motor protection 4-11

4.2.4 Mains types/conditions 4-12

4.2.5 Interaction with compensation equipment 4-12

4.2.6 Specification of all cables used 4-12

4.2.7 Power connections 4-13

4.2.7.1 Mains connection 4-13

4.2.7.2 Motor connection 4-15

4.2.7.3 Connection of a brake unit 4-17

4.2.7.4 DC-bus connection of several drives 4-18

4.2.8 Control connections 4-20

4.2.8.1 Control cables 4-20

4.2.8.2 Assignment of the control terminals 4-20

4.2.8.3 Connection diagrams 4-22

4.2.9 Motor temperature monitoring 4-28

4.2.10 Feedback systems 4-29

4.3 Installation of a CE-typical drive system 4-33

Contents

Part C

5 Commissioning 5-1

5.1 Before switching on 5-1

5.2 Initial switch-on 5-1

5.3 Switch on the controller 5-4

5.4 Switch on PC, start GDC 5-5

5.5 General parameter set 5-7

5.5.1 Adapt controller to the mains 5-7

5.5.2 Adapt controller to the motor 5-8

5.5.3 Adapt controller to the plant 5-10

5.5.4 Set product parameters 5-10

5.5.5 Set-up machine (Start of the register evaluation) 5-11

5.5.6 Additional commissioning assistance 5-13

5.5.6.1 Selection of the direction of rotation for master encoder/motor 5-13

5.5.6.2 Format definitions 5-13

5.5.6.3 The register mark window 5-14

5.5.6.4 Phase positioning commands 5-15

5.5.6.5 Phase adjustment speed 5-16

5.5.6.6 Status/control word of the register controller 5-16

6 During operation 6-1

6.1 Status indications 6-1

6.1.1 On the 9371 BB keypad 6-1

6.1.2 In Global Drive Control 6-2

6.2 Information on operation 6-3

6.2.1 Switching on the motor side 6-3

6.2.2 Controller protection by current derating 6-4

Contents

Part D4.1

7 Configuration 7-1

7.1 Predefined configurations 7-1
7.1.1 Working with predefined configurations 7-1
7.2 Operating modes 7-2
7.2.1 Parameter setting 7-2
7.2.2 Control 7-2
7.2.3 Configuration with Global Drive Control 7-2
7.3 Working with function blocks 7-4
7.3.1 Signal types 7-4
7.3.2 Elements of a function block 7-5
7.3.3 Connection of function blocks 7-6
7.3.4 Entries into the processing table 7-10
7.3.4.1 Signal configuration with Global-Drive-Control 7-12
7.4 Terminal assignment 7-13
7.4.1 Freely assignable digital inputs 7-13
7.4.2 Freely assignable digital outputs 7-14
7.4.3 Input and outputof the STATE-BUS 7-15
7.4.4 Freely assignable analog inputs 7-16
7.4.5 Freely assignable analog outputs 7-17
7.5 Introduction into register control 7-18
7.6 Description of function blocks 7-19
7.6.1 Register control (RC) 7-22
7.6.1.1 Phase ratio synchronizing 7-25
7.6.1.2 Plant data 7-27
7.6.1.3 Measuring system and format definitions 7-28
7.6.1.4 Selection of the direction of rotation master encoder/motor 7-28
7.6.1.5 Product parameters 7-29
7.6.1.6 Initialization of register control 7-30
7.6.1.7 Dead time compensation of the label detection channels 7-33
7.6.1.8 Label window 7-34
7.6.1.9 Setpoint register input and generation of manipulated value 7-36
7.6.1.10 Register trimming RPTRIM 7-39
7.6.1.11 Material length trimming RVTRIM 7-40
7.6.1.12 Gear control 7-41
7.6.1.13 Set coarse register 7-42
7.6.1.14 Phase trimming 7-43
7.6.1.15 Messages and monitoring 7-44
7.6.1.16 Control/status word of the register control 7-46
7.6.1.17 Display codes of function block RC 7-47
7.6.2 Absolute value generator (ABS) 7-49
7.6.3 Addition block (ADD) 7-50
7.6.4 Automation interface (AIF-IN) 7-51
7.6.5 Automation interface (AIF-OUT) 7-54
7.6.6 Analog input via terminal 1,2/3,4 (AIN) 7-56
7.6.7 AND link (AND) 7-58
7.6.8 Inverter (ANEG) 7-61
7.6.9 Analog output via terminal 62/63 (AOUT) 7-62
7.6.10 Arithmetic block (ARIT) 7-64

Contents

7.6.11 Arithmetic block (ARITPH) 7-67
7.6.12 Changeover switch for analog signals (ASW) 7-68
7.6.13 Holding brake (BRK) 7-69
7.6.13.1 Close brake 7-70
7.6.13.2 Open brake 7-70
7.6.13.3 Setting controller inhibit 7-71
7.6.14 System bus (CAN-IN) 7-73
7.6.15 System bus (CAN-OUT) 7-80
7.6.16 Comparator (CMP) 7-84
7.6.16.1 Function 1: CMP1-IN1 = CMP1-IN2 7-85
7.6.16.2 Function 2: CMP1-IN1 > CMP1-IN2 7-86
7.6.16.3 Function 3: CMP1-IN1 < CMP1-IN2 7-86
7.6.16.4 Function 4: |CMP1-IN1| = |CMP1-IN2| 7-87
7.6.16.5 Function 5: |CMP1-IN1| > |CMP1-IN2| 7-87
7.6.16.6 Function 6: |CMP1-IN1| < |CMP1-IN2| 7-87
7.6.17 Signal conversion (CONV) 7-88
7.6.18 Phase conversion (CONVPHA) 7-90
7.6.19 Characteristic function (CURVE) 7-91
7.6.19.1 Characteristic with two co-ordinates 7-92
7.6.19.2 Characteristic with three co-ordinates 7-92
7.6.19.3 Characteristic with four co-ordinates 7-93
7.6.20 Dead band (DB) 7-94
7.6.21 Control of the controller (DCTRL) 7-95
7.6.21.1 Quick stop (QSP) 7-96
7.6.21.2 Operation inhibited (DISABLE) 7-97
7.6.21.3 Controller inhibit (CINH) 7-97
7.6.21.4 TRIP-SET 7-97
7.6.21.5 TRIP-RESET 7-97
7.6.21.6 Change of parameter set (PAR) 7-98
7.6.21.7 Controller state 7-98
7.6.22 Digital frequency input (DFIN) 7-99
7.6.23 Digital frequency ramp generator (DFRFG) 7-102
7.6.23.1 Profile generator 7-102
7.6.23.2 Quick stop 7-103
7.6.23.3 Ramp generator stop 7-104
7.6.23.4 RESET 7-104
7.6.23.5 Detect phase difference 7-104
7.6.24 Digital frequency processing (DFSET) 7-105
7.6.24.1 Setpoint conditioning 7-106
7.6.24.2 Processing of correction values 7-106
7.6.24.3 Synchronization on zero track or touch probe 7-107
7.6.25 Digital frequency output (DFOUT) 7-108
7.6.25.1 Output signals on X10 7-109
7.6.25.2 Output of an analog signal 7-110
7.6.25.3 Output of a speed signal 7-110
7.6.25.4 Encoder simulation of the resolver 7-111
7.6.25.5 Direct output of X8 (C0540 = 4) 7-111
7.6.25.6 Direct output of X9 (C0540 = 5) 7-111
7.6.26 Delay elements (DIGDEL) 7-112
7.6.26.1 On-delay 7-113
7.6.26.2 Dropout delay 7-113
7.6.26.3 General delay 7-114
7.6.27 Freely assignable digital inputs (DIGIN) 7-115
7.6.28 Freely assignable digital outputs (DIGOUT) 7-116
7.6.29 First order derivative-action element (DT1) 7-117

Contents

7.6.30 Free piece counter (FCNT) 7-118
7.6.31 Free codes (FCODE) 7-119
7.6.31.1 FCODE strobe 7-119
7.6.32 Free digital outputs (FDO) 7-120
7.6.33 Freely assignable input variables (FEVAN) 7-122
7.6.34 Flipflop (FLIP) 7-127
7.6.35 Limiter (LIM) 7-129
7.6.36 Internal motor control (MCTRL) 7-130
7.6.36.1 Current controller 7-132
7.6.36.2 Additional torque setpoint 7-132
7.6.36.3 Torque limiting 7-132
7.6.36.4 Speed controller 7-133
7.6.36.5 Torque control with speed limit 7-133
7.6.36.6 Limiting of speed setpoint 7-134
7.6.36.7 Phase controller 7-134
7.6.36.8 Quick stop (QSP) 7-135
7.6.36.9 Field weakening 7-135
7.6.36.10 Chopping frequency change-over 7-136
7.6.37 Motor potentiometer (MPOT) 7-137
7.6.38 Logic NOT (NOT) 7-139
7.6.39 Conditioning of the setpoint speed (NSET) 7-141
7.6.39.1 Main setpoint channel 7-142
7.6.39.2 JOG setpoints 7-143
7.6.39.3 Setpoint inversion 7-144
7.6.39.4 S ramp 7-145
7.6.39.5 Arithmetic operation 7-145
7.6.39.6 Additional setpoint 7-145
7.6.40 OR operation (OR) 7-146
7.6.41 Process controller (PCTRL1) 7-149
7.6.41.1 Control characteristic 7-150
7.6.41.2 Ramp generator 7-151
7.6.41.3 Value range of the output signal 7-151
7.6.41.4 Evaluation of the output signal 7-151
7.6.41.5 Deactivation of the process controller 7-151
7.6.42 Phase comparator (PHCMP) 7-152
7.6.43 Signal adaptation for phase signals (PHDIV) 7-153
7.6.44 Phase integrator (PHINT) 7-154
7.6.44.1 Constant input value 7-155
7.6.44.2 Scaling of PHINTx-OUT 7-156
7.6.45 First order delay element (PT1) 7-157
7.6.46 CW-CCW-QSP link (R/L/Q) 7-158
7.6.47 Homing function (REF) 7-158
7.6.47.1 Profile generator 7-159
7.6.47.2 Homing modes 7-161
7.6.47.3 Control via input signals 7-163
7.6.47.4 Output of status signals 7-164
7.6.47.5 Connection of the function block 7-164
7.6.48 Ramp generator (RFG) 7-165
7.6.48.1 Calculation and setting of the times Tir and Tif 7-166
7.6.48.2 Loading of the ramp generator 7-166
7.6.49 Sample and hold function (S&H) 7-167
7.6.50 S-shaped ramp generator (SRFG) 7-168
7.6.51 Output of digital status signals (STAT) 7-170
7.6.52 Control of a drive network (STATE-BUS) 7-171

Contents

7.6.53 Edge evaluation (TRANS) 7-172
7.6.53.1 Evaluate positive edge 7-173
7.6.53.2 Evalute negative edge 7-173
7.6.53.3 Evaluate positive or negative edge 7-174

7.7 Parameter setting 7-175
7.7.1 Ways of parameterization 7-175
7.7.2 Change parameters 7-176
7.7.3 Parameter set transfer 7-177
7.7.3.1 Password protection 7-179

7.8 Monitoring 7-180
7.8.1 Reactions 7-180
7.8.2 Setting of reactions 7-181
7.8.3 Monitoring functions 7-182

Part D4.2

7.9 Code table 7-186
7.9.1 Function blocks 7-189
7.9.2 Freely assignable codes 7-220
7.9.3 Display codes 7-221
7.9.4 Fault and monitoring functions 7-222

7.10 Selection list 7-225

7.11 Table of attributes 7-230

7.12 Selection list - motors 7-244

Contents

Part E

8 Troubleshooting and fault elimination 8-1

8.1 Troubleshooting 8-1

8.2 Fault analysis with the history buffer 8-3

8.2.1 Structure of the history buffer 8-3

8.2.2 Working with the history buffer 8-4

8.3 Fault messages 8-6

8.4 Reset of fault messages 8-10

9 Maintenance 9-1

Part F

10 DC bus connection of several drives

See folder “Planning”

Part G

11 Application of brake units

See folder “Planning”

Part H

12 Automation

See folder “Planning”

Part I

13 Accessories and motors

See folder “Planning”

Contents

Part K

14 Selection help

See folder “Planning”

15 Application examples 15-1

15.1 Cross-cutter, asynchronous 15-2
15.1.1 Master value 15-3
15.1.1.1 Master value resolution 15-3
15.1.1.2 Master encoder position 15-3
15.1.1.3 Pilot tension drive with 9300 as master encoder 15-3
15.1.2 Motor + gearbox 15-3
15.1.2.1 Motor power 15-3
15.1.2.2 Motor speed for max. cutting power 15-4
15.1.2.3 Last adaptation 15-4
15.1.3 Backlash 15-4
15.1.3.1 Mechanical design in general 15-4
15.1.4 Feedback system 15-4
15.1.5 Sensors 15-5
15.1.5.1 Register mark sensor 15-5
15.1.5.2 Cylinder sensor 15-5
15.1.6 Product parameters 15-5
15.1.7 Peripheral system 15-6
15.1.7.1 System bus (CAN) 15-6
15.1.7.2 BCD decade switch 15-8
15.1.7.3 Other system bus components 15-8
15.1.8 Fieldbus 15-9
15.2 Tension control (insetter) 15-10
15.3 Coating station 15-11
15.4 Labelling station with asynchronous cross-cutter 15-12

Part L

16 Signal flow charts 16-1

16.1 Main signal flow chart 16-1
16.1.1 Signal flow charts 16-4

Part M

17 Glossary 17-1

18 Table of keywords 18-1

Contents

1 Preface and general information

1.1 How to use this Manual

- This Manual supplements the Operating Instructions of the servo register controller.
- It contains the Operating Instructions which were valid when the Manual was printed with additional information on systems engineering, functionality and accessories.
  – In case of doubt, the Operating Instructions attached to the 93XX servo register controller is valid.
- The Manual assists you in selecting and dimensioning the 93XX servo register controller and the accessories to ensure a safe and trouble-free operation. It contains safety information which must be observed.
- The Manual must always be in a complete and perfectly readable state.

1.1.1 Terminology used

Term	In the following text used for
93XX	Any type of servo register controller (types 9321 ... 9332)
Controller	Servo register controller 93XX
Drive system	Drive systems with servo register controllers 93XX and other Lenze drive components

1.1.2 What is new?

Version	Id. No.	Modifications
1.0 12/99	00412739	First edition

1.2 Legal regulations

Labelling	**Nameplate**	**CE-identification**	**Manufacturer**
	Lenze controllers are unambiguously designated by the contents of the nameplate.	Conforms to the EC Low-Voltage Directive	Lenze GmbH & Co KG Postfach 101352 D-31763 Hameln
Application as directed	**Servo register controller 93XX** ● must only be operated under the conditions prescribed in these Instructions. ● are components – for open and closed loop control of variable speed drives with PM synchronous motors, asynchronous servo motors or asynchronous standard motors. – for installation in a machine – for assembly with other components to form a machine. ● are electric units for the installation into control cabinets or similar enclosed operating housing. ● comply with the requirements of the Low-Voltage Directive. ● are not machines for the purpose of the Machinery Directive. ● are not to be used as domestic appliances, but only for industrial purposes. **Drive systems with servo register controllers 93XX** ● comply with the EMC Directive if they are installed according to the guidelines of CE-typical drive systems. ● can be used – for operation at public and non-public mains – for operation in industrial premises and residential areas. ● The user is responsible for the compliance of his application with the EC directives. **Any other use shall be deemed as inappropriate!**		
Liability	● The information, data, and notes in these instructions met the state of the art at the time of printing. Claims on modifications referring to controllers which have already been supplied cannot be derived from the information, illustrations, and descriptions. ● The specifications, processes, and circuitry described in these instructions are for guidance only and must be adapted to your own specific application. Lenze does not take responsibility for the suitability of the process and circuit proposals. ● The specifications in these Instructions describe the product features without guaranteeing them. ● Lenze does not accept any liability for damage and operating interference caused by: – Disregarding the operating instructions – Unauthorized modifications to the controller – operating errors – improper working on and with the controller		
Warranty	● Warranty conditions: see Sales and Delivery Conditions of Lenze GmbH & Co KG. ● Warranty claims must be made to Lenze immediately after detecting the deficiency or fault. ● The warranty is void in all cases where liability claims cannot be made.		
Waste disposal	**Material**	**recycle**	**dispose**
	Metal	●	-
	Plastic	●	-
	Assembled PCBs	-	●

1.3 EC directives/Declaration of conformity

1.3.1 What is the purpose of EC directives?

EC directives are issued by the European Council and are intended for the determination of common technical requirements (harmonization) and certification procedures within the European Community. At the moment, there are 21 EC directives of product ranges. The directives are or will be converted to national laws of the member states. A certification issued by one member state is valid automatically without any further approval in all other member states.

The texts of the directive are restricted to the essential requirements. Technical details are or will be determined by European harmonized standards.

1.3.2 What does the CE mark imply?

After a verification, the conformity according to the EC directives is certified by affixing a CE mark. Within the EC there are no commercial barriers for a product with the CE mark.

The attachment of a declaration of conformity is not necessary for most of the directives. Users or customers are therefore not aware which of the 21 EC Directives comply with a certain product and which harmonized standards were considered in the evaluation procedure of conformity.

Controllers with the CE mark exclusively correspond to the Low Voltage Directive. So far, only recommendations were given for the compliance with the EMC regulation. In this case, the user himself has to prove the compliance with the CE directives for the installation of a machine. Lenze has already given proof of the compliance with the CE directives and confirmed this by the declaration of conformity to the EMC CE directive.

1.3.3 EC Low-Voltage Directive

(73/23/EEC)

amended by: CE Mark Directive (93/68/EEC)

General

- The Low-Voltage Directive is effective for all electrical equipment for use with a rated voltage between 50 V and 1000V V AC and between 75 V and 1500 V DC and with normal ambient conditions. The use of e.g. electrical equipment in explosive atmospheres and electrical parts in passenger and goods lifts are excepted.
- The objective of the Low-Voltage Directive is to ensure that only electrical equipment which does not endanger the safety of persons or animals is placed on the market. It should also be designed to conserve material assets.

1.3.3.1 EC Declaration of Conformity ’95

for the purpose of the EC Low-Voltage Directive (73/23/EEC)

amended by: CE Mark Directive (93/68/EEC)

The 93XX controllers are developed, designed, and manufactured in compliance with the above mentioned EC directive under the sole responsibility of

Lenze GmbH & Co KG, Postfach 10 13 52, D-31763 Hameln

Considered standards:

Standard	
DIN VDE 0160 5.88 + A1 / 4.89 + A2 / 10.88 EN 50178 Classification VDE 0160 / 11.94	Electronic equipment for use in electrical power installations
DIN VDE 0100	Standards for the erection of power installations
EN 60529	IP Degrees of protection
IEC 249 / 1 10/86, IEC 249 / 2-15 / 12/89	Base material for printed circuits
IEC 326 / 1 10/90, EN 60097 / 9.93	Printed circuits, printed boards
DIN VDE 0110 /1-2 /1/89 /20/ 8/90	Creepage distances and clearances

Hameln, 01 January,1997

(i. V. Langner)
Product Manager

(i. V. Lackhove)
Project Manager

1.3.4 EC Directive Electromagnetic Compatibility

(89/336/EEC)

amended by: First Amendment Directive (92/31/EEC)
CE Mark Directive (93/68/EEC)

General

- The EC Electromagnetic Compatibility Directive is effective for ”devices” which may cause electromagnetic interference or the operation of which may be impaired by such interference.
- The aim is to limit the generation of electromagnetic interference such that an operation without interferences of radio and telecommunication systems and other equipment is possible. The devices must also show an appropriate resistance against electromagnetic interference to ensure the application as directed.
- Controllers cannot be operated on their own. Controllers cannot be evaluated on their own in terms of EMC. Only after the integration of the controllers into a drive system, can this system be tested concerning the objectives of the EC EMC Directive and the compliance with the ”Law about the Electromagnetic Compatibility of Devices”.
- Lenze has evaluated the conformity of controllers on defined drive systems. These evaluated drive systems are called ”CE-typical drive system” in the following.

  Therefore, the user of the controllers can
  – either determine the system components and their implementation into a drive system himself and declare the conformity under his own responsibility,
  – or install the drive system according to the CE-typical drive system evaluated by the inverter manufacturer who has already proved the conformity.

Components of the CE typical drive system

System component	Specification
Controller	Controller types 93XX series For the type designation refer to the first cover page
Mains filter A/B	For data and filter assignment see chapter ”Ratings”
Motor cable	Screened power cable with tinned E-CU braid with a minimum of 85% optical coverage.
Mains cable between mains filter and controller	As from cable length 300 mm: Screened power cable with tinned E-CU braid with a minimum of 85% optical coverage.
Control cables	Screened signal cable type LIYCY
Motor	Standard three-phase asynchronous motor, servo synchronous motor, servo asynchronous motor Lenze types DXRA, MDXKX or similar

- Controller, RFI filter and mains choke are located on a common mounting plate.
- The system components were wired according to chapter 4 ”Electrical Installation”.

1.3.4.1 EC Declaration of Conformity ’95

in the sense of Electromagnetic Compatibility (89/336/EEC)

amended by: First Amendment Directive (92/31/EEC)
CE Mark Directive (93/68/EEC)

The 93XX controllers are no independent devices in the sense of the law about electromagnetic compatibility (EMVG of 9 Nov., 92 and 1st EMVGÄndG of 30 Aug, 95). The controller can only be evaluated in terms of EMC after it has been implemented into a drive system.

Lenze GmbH & Co KG, Postfach 10 13 52, D-31763 Hameln

declares the conformity of the described ”CE-typical drive system” with the 93XX controllers to the above mentioned EC Directive.

The conformity evaluation is based on the working paper of the product standard for drive systems:

IEC 22G-WG4 5/94	EMC product standard including specific test methods for power drive systems

Considered generic standards:

Generic standard	
EN 50081-1 /92	Generic standard for the emission of noise Part 1: Residential area, commercial premises, and small businesses
EN 50081-2 /93 (used in addition to the requirements of IEC 22G)	Generic standard for the emission of noise Part 2: Industrial premises The emission of noise in industrial premises is not limited in IEC 22G.
prEN 50082-2 3/94	Generic standard for noise immunity Part 2: Industrial premises The requirements of noise immunity for residential areas were not considered, since these are less strict.

Considered basic standards for the test of the noise emission:

Basic standard	Test	Limit value
EN 55022 7/92	Radio interference housing and mains Frequency range 0.15 - 1000 MHz	Class B for use in residential areas and commercial premises
EN 55011 7/92 (used in addition to the requirements of IEC 22G)	Radio interference housing and mains Frequency range 0.15 - 1000 MHz The emission of noise in industrial premises is not limited in IEC 22G.	Class A for use in industrial premises
IEC 801-2 /91	Electrostatic discharge on housing and heatsink	Severity 3 6 kV for contact, 8 kV clearance
IEC 1000-4-3	Electromagnetic fields Frequency range 26 - 1000 MHz	Severity 3 10 V/m
ENV 50140 /93	High-frequency field Frequency range 80 - 1000 MHz, 80% amplitude-modulated	Severity 3 10 V/m
	Fixed frequency 900 MHz with 200 Hz, 100 % modulated	10 V/m
IEC 801-4 /88	Fast transients, burst on power terminals	Severity 3 2 kV / 5 kHz
	Burst on bus and control cables	Severity 4 2 kV / 5 kHz
IEC 801-5	Surge test mains cables	Installation class 3

Hameln, 01 January,1997

(i. V. Langner)
Product Manager

(i. V. Lackhove)
Project Manager

1.3.5 EC Machinery Directive

(98/37/EC)

General

For the purpose of the Machinery Directive, ”machinery” means an assembly of linked parts or components, at least one of which moves, with the appropriate actuators, control and power circuits, etc., joined together for a specific application, in particular for the processing, treatment, moving or packaging of a material.

1.3.5.1 EC Manufacturer’s Declaration

in the sense of the EC Machinery Directive (98/37/EC)

The 93XX controllers are developed, designed, and manufactured under the sole responsibility of

Lenze GmbH & Co KG, Postfach 10 13 52, D-31763 Hameln

Commissioning of the controllers is prohibited until it is proven that the machine where they are to be installed, corresponds to the EC Machinery Directive.

Hameln, 01 January,1997

(i. V. Langner)	(i. V. Lackhove)
Product Manager	Project Manager

2 Safety information

2.1 See Operating Instructions

Safety information

Show/Hide Bookmarks

EDS9300-RB
00412730

Lenze

Manual
Part B

Technical data

Installation

Global Drive

Servo register controller 9300

This documentation is valid for the servo register controllers 9300 as of version:

33.932X	ER	2G	1x	(9321 - 9329)
33.933X	ER	2G	1x	(9330 - 9332)
33.932X	CR	2G	1x	Cold Plate (9321 - 9328)

Type

Desgin:
E = Enclosure IP20
C = Cold Plate
xK = Cam profiler
xP = Position controller
xR = Register controller
xS = Servo inverter

Hardware level and index

Software level and index

Variant

Explanation

© 1999 Lenze GmbH & Co KG

Without written approval of Lenze Lenze GmbH & Co KG no part of these Instructions must be copied or given to third parties.

All indications given in these Operating instructions have been selected carefully and comply with the hardware and software described. Nevertheless, deviations cannot be ruled out. We do not take any responsibility or liability for damages which might possibly occur. Required corrections will be made in the following editions.

Version 1.0 12/99

Contents

Part B

3 Technical data 3-1

3.1 Features 3-1

3.2 General data/Operating conditions 3-2

3.3 Rated data 3-3

3.3.1 Types 9321 to 9325 3-3

3.3.2 Types 9326 to 9332 3-4

3.3.3 Fuses and cable cross-sections 3-5

3.3.4 Mains filter 3-6

3.4 Dimensions 3-6

4 Installation 4-1

4.1 Mechanical installation 4-1

4.1.1 Important notes 4-1

4.1.2 Standard assembly with fixing rails or fixing brackets 4-2

4.1.3 Assembly with thermally separated power stage (”push-through technique”) 4-3

4.1.4 Assembly of variants 4-6

4.2 Electrical installation 4-9

4.2.1 Protection of persons 4-9

4.2.1.1 Residual-current circuit breakers 4-9

4.2.1.2 Insulation 4-10

4.2.1.3 Replacement of defective fuses 4-10

4.2.1.4 Mains disconnection 4-10

4.2.2 Protection of the controller 4-11

4.2.3 Motor protection 4-11

4.2.4 Mains types/conditions 4-12

4.2.5 Interaction with compensation equipment 4-12

4.2.6 Specification of all cables used 4-12

4.2.7 Power connections 4-13

4.2.7.1 Mains connection 4-13

4.2.7.2 Motor connection 4-15

4.2.7.3 Connection of a brake unit 4-17

4.2.7.4 DC-bus connection of several drives 4-18

4.2.8 Control connections 4-20

4.2.8.1 Control cables 4-20

4.2.8.2 Assignment of the control terminals 4-20

4.2.8.3 Connection diagrams 4-22

4.2.9 Motor temperature monitoring 4-28

4.2.10 Feedback systems 4-29

4.3 Installation of a CE-typical drive system 4-33

Contents

3 Technical data

3.1 Features

- Single axis in narrow design
  – Thus space-saving installation
- Power range: 370 W to 75 kW
  – Uniform control module and thus uniform connection for the control cables over the complete power range
- Heat sink can be separated
  – The cooling can be achieved outside the control cabinet (Push-through or Cold Plate technique).
- Power connections from the top (supply) or from the bottom (motor)
  – Simple connection for multi-axis applications
- Direct connection of resolver or encoder feedback
  – Simple connection via prefabricated system cables (accessories)
  – Connecting cables can be plugged
- Register control
  – Register correction is possible during operation
  – Integrated sensor compensation for gearbox factor adaptation
  – Teach function for the selection of the significant material register mark
  – Adjustable window for the detection of the register mark
  – Monitoring of the mark sensors
  – Adjustable controller behaviour
  – Averaging, filter times, control characteristic
  – Insetter function
  – Flexible variable limitation
- Parameterization in machine variables
  – Selection of cutting size and printing size in mm or inches
  – Adaptation to the previous machine using the parameters for encoder increments and material supply
- Direct reading of the register mark sensors
  – Adjustable dead time compensation for the sensors
- Simple programming via PC
- Application configuration for control functions and input/output signals
  – Comprehensive function block library
  – High flexibility in the adaptation of the internal control structure to the application
- Integrated automation interface
  – Simple extensions of the controller functions
- System bus for the connection of servo inverters and for the extension of input and output terminals
- Approval of standard devices UL 508, File No. 132659 (listed).
- Approval 9371 BB (BAE) UL 508, File No. 132659 (listed).

3.2 General data/Operating conditions

Field	Values
Vibration resistance	Germanischer Lloyd, general conditions
Permissible humidity	Humidity class F without condensation (medium relative humidity 85 %)
Permissible temperature ranges	during transport of the controller: -25 °C … +70 °C during storage of the controller: -25 °C … +55 °C during operation of the controller: 0 °C … +40 °C without derating +40 °C … +55 °C with power derating (devices 9321-9326) +40 °C … +50 °C with power derating (devices 9327-9332)
Permissible installation height h	h ≤ 1000 m a.m.s.l. without derating 1000 m a.m.s.l. < h ≤ 4000 m a.m.s.l. with derating
Degree of pollution	VDE 0110 part 2 pollution degree 2
Noise emission	Requirements acc. to EN 50081-2, EN 50082-1, EN 61800-3 Limit value class A acc. to EN 55011 (industrial area) with mains filter A Limit value class B acc. to EN 55022 (residential area) with mains filter B and installation to control cabinet
Noise immunity	Limit values maintained using mains filter. Requirements acc. to EN 50082-2, IEC 22G-WG4 (Cv) 21 . **Requirements** **Standard** **Severity** ESD EN61000-4-2 3, i.e. 8 kV for air discharge and 6 kV for contact discharge RF interference (enclosure) EN61000-4-3 3, i.e. 10 V/m; 27 to 1000 MHz Burst EN61000-4-4 3/4, i.e. 2 kV/5 kHz Surge on mains cable IEC 1000-4-5 3, d.h. 1,2/50 µs, 1 kV phase - phase, 2 kV phase - PE
Insulation strength	Overvoltage category III acc. to VDE 0110
Packing	acc. to DIN 4180 9321 to 9332: Delivery packing
Type of protection	IP20 IP41 on the heat-sink side for thermal separation (punching) NEMA 1: Protection against contact
Approvals	CE: Low Voltage Directive UL508: Industrial Control Equipment UL508C: Power Conversion Equipment

3.3 Rated data

3.3.1 Types 9321 to 9325

	Type	EVS9321-ER	EVS9322-ER	EVS9323-ER	EVS9324-ER	EVS9325-ER
	Order no.	EVS9321-ER	EVS9322-ER	EVS9323-ER	EVS9324-ER	EVS9325-ER
	Type	**EVS9321-CR**	**EVS9322-CR**	**EVS9323-CR**	**EVS9324-CR**	**EVS9325-CR**
	Order no.	EVS9321-CR	EVS9322-CR	EVS9323-CR	EVS9324-CR	EVS9325-CR
Mains voltage	V_r [V]	320 V ± 0% ≤ V_r ≤ 528 V ± 0% ; 45 Hz … 65 Hz ± 0%				
Alternative DC supply	V_G [V]	460 V ± 0% ≤ V_{DC} ≤ 740 V ± 0%				
Mains current with mains filter Mains current without mains filter	I_r [A]	1.5 2.1	2.5 3.5	3.9 5.5	7.0 -	12.0 16.8
Ratings for operation at a mains: 3 AC / 400V / 50Hz/60Hz						
Motor power (4 pole ASM)	P_r [kW]	0.37	0.75	1.5	3.0	5.5
	P_r [hp]	0.5	1.0	2.0	4.0	7.5
Output power U, V, W (8kHz*)	S_{r8} [kVA]	1.0	1.7	2.7	4.8	9.0
Output power $+U_G$, $-U_G$ 2)	P_{DC} [kW]	2.0	0.75	2.2	0.75	0
Output current (8 kHz*)	I_{r8} [A]	1.5	2.5	3.9	7.0	13.0
Output current (16 kHz*)	I_{r16} [A]	1.1	1.8	2.9	5.2	9.7
Max. output current (8 kHz*)1)	I_{max8} [A]	2.3	3.8	5.9	10.5	19.5
Max. output current (16 kHz*)1)	I_{max16} [A]	1.7	2.7	4.4	7.8	14.6
Max. standstill current (8 kHz*)	I_{08} [A]	2.3	3.8	5.9	10.5	19.5
Max. standstill current (16 kHz*)	I_{016} [A]	1.7	2.7	4.4	7.8	14.6
Ratings for operation at a mains: 3 AC / 480V / 50Hz/60Hz						
Motor power (4 pole ASM)	P_r [kW]	0.37	0.75	1.5	3.0	5.5
	P_r [hp]	0.5	1.0	2.0	4.0	7.5
Output power U, V, W (8kHz*)	S_{r8} [kVA]	1.2	2.1	3.2	5.8	10.8
Output power $+U_G$, $-U_G$ 2)	P_{DC} [kW]	2.0	0.75	2.2	0.75	0
Output current (8 kHz*)	I_{r8} [A]	1.5	2.5	3.9	7.0	13.0
Output current (16 kHz*)	I_{r16} [A]	1.1	1.8	2.9	5.2	9.7
Max. output current (8 kHz*)1)	I_{max8} [A]	2.3	3.8	5.9	10.5	19.5
Max. output current (16 kHz*)1)	I_{max16} [A]	1.7	2.7	4.4	7.8	14.6
Max. standstill current (8 kHz*)	I_{08} [A]	2.3	3.8	5.9	10.5	19.5
Max. standstill current (16 kHz*)	I_{016} [A]	1.7	2.7	4.4	7.8	14.6
Motor voltage	V_M [V]	0 - 3 V_{mains}				
Power loss (operation with I_{rx})	P_{loss} [W]	100	110	140	200	260
Power derating	[%/K] [%/m]	40°C < T_{amb} < 55 °C: 2 %/K (not UL approved) 1000 m amsl < h ≤ 4000 m amsl: 5%/1000m				
Weight	m [kg]	3.5	3.5	5.0	5.0	7.5

1) The currents apply to a periodical load cycle with 1 minute overcurrent with the current mentioned here and 2 minutes base load with 75% I_{rx}

2) When operated under rated load, the controller can supply this power additionally.

* Chopper frequency of the inverter (C0018)

3.3.2 Types 9326 to 9332

	Type	EVS9326-ER	EVS9327-ER	EVS9328-ER	EVS9329-ER	EVS9330-ER	EVS9331-ER	EVS9332-ER
	Order no.	EVS9326-ER	EVS9327-ER	EVS9328-ER	EVS9329-ER	EVS9330-ER	EVS9331-ER	EVS9332-ER
	Type	**EVS9326-CR**	**EVS9327-CR**	**EVS9328-CR**				
	Order no.	EVS9326-CR	EVS9327-CR	EVS9328-CR				
Mains voltage	V_r [V]	320 V ± 0% ≤ V_r ≤ 528 V ± 0% ; 45 Hz … 65 Hz ± 0%						
Alternative DC supply	V_G [V]	460 V ± 0% ≤ V_G ≤ 740 V ± 0%						
Mains current with mains filter Mains current without mains filter	I_r [A]	20.5 -	27.0 43.5	44.0 -	53.0 -	78.0 -	100 -	135 -
Ratings for operation at a mains: 3 AC / 400V / 50Hz/60Hz								
Motor power (4 pole ASM)	P_r [kW]	11.0	15.0	22.0	30.0	45.0	55.0	75.0
	P_r [hp]	15.0	20.5	30.0	40.0	60.0	73.5	100.0
Output power UVW (8 kHz*)	S_{r8} [kVA]	16.3	22.2	32.6	40.9	61.6	76.2	100.5
Output power + U_G, - U_{DC} 2)	P_{DC} [kW]	0	10	4	0	5	0	0
Output current (8 kHz*) 1)	I_{r8} [A]	23.5	32.0	47.0	59.0	89.0	110.0	145.0
Output current (16 kHz*) 1)	I_{r16} [A]	15.3	20.8	30.6	38.0	58.0	70.0	90.0
Max. output current (8 kHz*)	I_{max8} [A]	35.3	48.0	70.5	88.5	133.5	165.0	217.5
Max. output current (16 kHz*)	I_{max16} [A]	23.0	31.2	45.9	57.0	87.0	105.0	135.0
Max. standstill current (8 kHz*)	I_{08} [A]	23.5	32.0	47.0	52.0	80.0	110.0	126.0
Max. standstill current (16kHz*)	I_{016} [A]	15.3	20.8	30.6	33.0	45.0	70.0	72.0
Ratings for operation at a mains: 3 AC / 480V / 50Hz/60Hz								
Motor power (4 pole ASM)	P_r [kW]	11.0	18.5	30.0	37.0	45.0	55.0	90.0
	P_r [hp]	15.0	25.0	40.0	49.5	60.0	73.5	120.0
Output power UVW (8 kHz*)	S_{r8} [kVA]	18.5	25.0	37.0	46.6	69.8	87.3	104.0
Output power + U_{DC}, - U_{DC} 2)	P_{DC} [kW]	0	12	4.8	0	6	0	6
Output current (8 kHz*)	I_{r8} [A]	22.3	30.4	44.7	56.0	84.0	105.0	125.0
Output current (16 kHz*)	I_{r16} [A]	14.5	19.2	28.2	35.0	55.0	65.0	80.0
Max. output current (8 kHz*)1)	I_{max8} [A]	33.5	45.6	67.1	84.0	126.0	157.5	187.5
Max. output current (16 kHz*)1)	I_{max16} [A]	21.8	28.8	42.3	52.5	82.5	97.5	120.0
Max. standstill current (8 kHz*)	I_{08} [A]	22.3	30.4	44.7	49.0	72.0	105.0	111.0
Max. standstill current (16kHz*)	I_{016} [A]	14.5	19.2	28.2	25.0	36.0	58.0	58.0
Motor voltage	V_M [V]	0 - 3 V_{mains}						
Power loss	P_{loss} [W]	360	430	640	810	1100	1470	1960
Power derating	[%/K] [%/K] [%/m]	*9326: at 40 °C < T_{amb} < 55 °C: 2%/K (not UL approved)* *9327 - 9332: at 40 °C < T_{amb} < 50 °C: 2.5%/K (not UL approved)* 1000 m amsl < h ≤ 4000 m amsl: 5%/1000m						
Weight	m [kg]	7.5	12.5	12.5	12.5	36.5	59	59

1) The currents apply to a periodical load cycle with 1 minute overcurrent with the current mentioned here and 2 minutes base load with 75% I_{rx}

2) When operated under rated load, the controller can supply this power additionally.

* Chopper frequency of the inverter (C0018)

3.3.3 Fuses and cable cross-sections

Type	Mains input L1, L2, L3, PE/motor connection U, V, W										Input +UG, -UG		
	Operation without mains filter					Operation with mains filter							
	Fuse		E.l.c.b.	Cable cross-section 2)		Fuse		E.l.c.b.	Cable cross-section 2)		Fuse	Cable cross-section 2)	
	VDE	UL	VDE	mm²	AWG	VDE	UL	VDE	mm²	AWG		mm²	AWG
9321	M 6A	5A	B 6A	1	17	M 6A	5A	B 6A	1	17	6.3A	1	17
9322	M 6A	5A	B 6A	1	17	M 6A	5A	B 6A	1	17	6.3A	1	17
9323	M 10A	10A	B 10A	1.5	15	M 10A	10A	B 10A	1.5	15	8A	1.5	15
9324	-	-	-	-	-	M 10A	10A	B 10A	1.5	15	12A	1.5	15
9325	M 32A	25A	B 32A	6	9	M 20A	20A	B 20A	4	11	20A	4	11
9326	-	-	-	-	-	M 32A	25A	B 32A	6	9	40A	6	9
9327	M 63A	63A	-	16	6	35A	35A	-	10	7	50A	10	7
9328	-	-	-	-	-	50A	50A	-	16	5	80A	16	5
9329	-	-	-	-	-	80A	80A	-	25	3	100A	25	3
9330	-	-	-	-	-	100A	100A	-	50	0	2 * 80A 1)	2 * 16	2 * 5
9331	-	-	-	-	-	125A	125 A	-	70	2/0	2 * 100A 1)	2 * 25	2 * 3
9332	-	-	-	-	-	160A	175 A	-	95	3/0	3 * 80A 1)	3 * 16	3 * 5

1) The DC bus fuses are connected in parallel
2) The valid local regulations must be observed

For operation of the controllers in a UL-approved plant:

- Use only UL-approved fuses and fuse holders:
  – 500 V to 600 V in the mains input (AC)
  – 700 V in DC-bus voltage (DC)
  – The activation characteristic is defined by ”H” or ”K5”.
- Use only UL-approved cables.

Tip!

UL-approved fuses and fuse holders can be obtained from, e.g. Bussmann or Ferraz.

Connection of the motor cables

- The protection of the motor cables is not necessary for functional reasons.
- Refer to the data listed in the table ”Operation with mains filter”.

3.3.4 Mains filter

Type	Rated data (uk ≈ 6%)		Lenze order number	
	Mains current	Inductance	for RFI degree A	for RFI degree B
9321	1.5 A	24 mH	EZN3A2400H002	EZN3B2400H002
9322	2.5 A	15 mH	EZN3A1500H003	EZN3B1500H003
9323	4 A	9 mH	EZN3A0900H004	EZN3B0900H004
9324	7 A	5 mH	EZN3A0500H007	EZN3B0500H007
9325	13 A	3 mH	EZN3A0300H013	EZN3B0300H013
9326	24 A	1.5 mH	EZN3A0150H024	EZN3B0150H024
9327	30 A	1.1 mH	EZN3A0110H030	EZN3B0110H030
9328	42 A	0.8 mH	EZN3A0080H042	EZN3B0080H042
9329	60 A	0.54 mH	EZN3A0055H060	EZN3B0055H060
9330	90 A	0.37 mH	EZN3A0037H090	EZN3B0037H090
9331	150 A	0.22 mH	EZN3A0022H150	EZN3B0022H150
9332	150 A	0.22 mH	EZN3A0022H150	EZN3B0022H150

The mains filters for RFI degree B contain additional RFI suppression components.

3.4 Dimensions

The dimensions of the controllers depend on the mechanical installation. (📖 4-1)

4 Installation

4.1 Mechanical installation

4.1.1 Important notes

- Use the controllers as built-in devices only!
- If the cooling air contains pollutants (dust, fluff, grease, aggressive gases):
  – Take suitable preventive measures, e.g. separate air duct, installation of filters, regular cleaning, etc.
- Ensure free space!
  – You can install several controllers next to each other without free space in a control cabinet.
  – Ensure unimpeded ventilation of cooling air and outlet of exhaust air!
  – Allow a free space of 100 mm at the top and at the bottom.
- Do not exceed the permissible ambient temperature during operation. (📖 3-2)
- With continuous oscillations or vibrations:
  – Check whether shock absorbers are necessary.

Possible mounting positions

Vertically on the control cabinet back panel with mains connections at the top:

- with enclosed fixing rails or fixing brackets. (📖 4-2)
- thermally separated with external heat sink
  – Push-through technique(📖 4-3)
  – ”Cold plate technique” (📖 4-6)

4.1.2 Standard assembly with fixing rails or fixing brackets

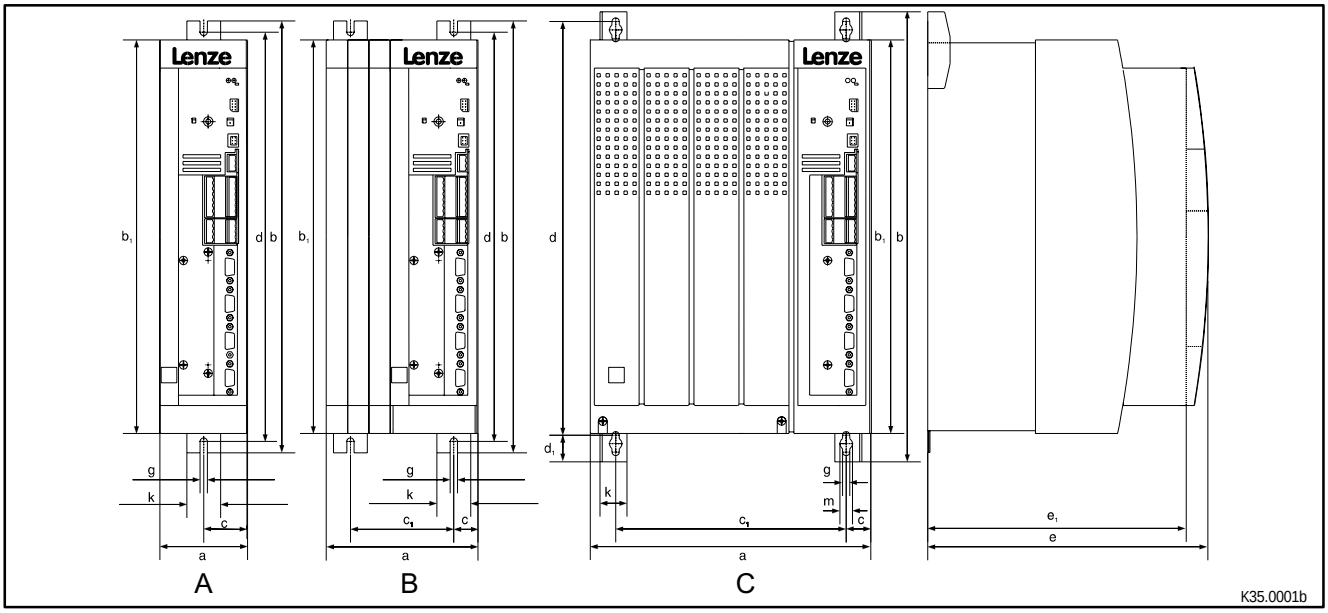

Fig. 4-1 Dimensions for assembly with fixing rails/fixing brackets

Type	Fig.	a	b	b1	c	c1	d	d1	e*	e1	g	k	m
9321, 9322	A	78	384	350	39	-	365	-	250	230	6.5	30	-
9323, 9324	A	97	384	350	48.5	-	365	-	250	230	6.5	30	-
9325, 9326	B	135	384	350	21.5	92	365	-	250	230	6.5	30	-
9327, 9328, 9329	C	250	402	350	22	206	370	24	250	230	6.5	24	11
9330	C	340	672	591	28,5	283	624	38	285	265	11	28	18
9331, 9332	C	450	748.5	680	30.5	389	702	38	285	265	11	28	18

* When using a plug-on fieldbus module:
Observe the free space required for the connection cables

All dimensions in mm

Controllers 9321 to 9326

- Assembly preparation:
  – Take out fixing rail(s) (accessory kit in the box) and mount them on the controller housing

Controllers 9327 to 9332

- Remove cover:
  – Loosen screws (X)
  – Swing cover to the top and detach
  – Take accessory kit out of the interior of the controller
- Assembly preparation:
  – Take out fixing bracket and screws (accessory kit) and mount them on the controller housing

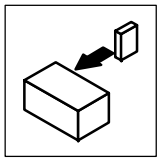

4.1.3 Assembly with thermally separated power stage (”push-through technique”)

The heat sink of the controllers 9321 ... 9329 can be mounted outside the control cabinet to reduce the heat generated in the control cabinet. For this, you need an assembly frame with seal (can be ordered from Lenze).

- Distribution of the power loss:
  – Approx. 65% via the separated heat sink (heat sink + blower)
  – Approx. 35 % inside the controller.
- The enclosure of the separated heat sink (heat sink + blower) is IP41.
- The rated data of the controller is still valid.

Preparation for assembly:

1. Lay the halves of the assembly frame into the slot provided on the controller.
2. Push the frame halves together until the ends catch.
3. Slip the seal ring over the heat sink and insert it into the slot provided.

Installation

Dimensions for the types 9321 to 9326

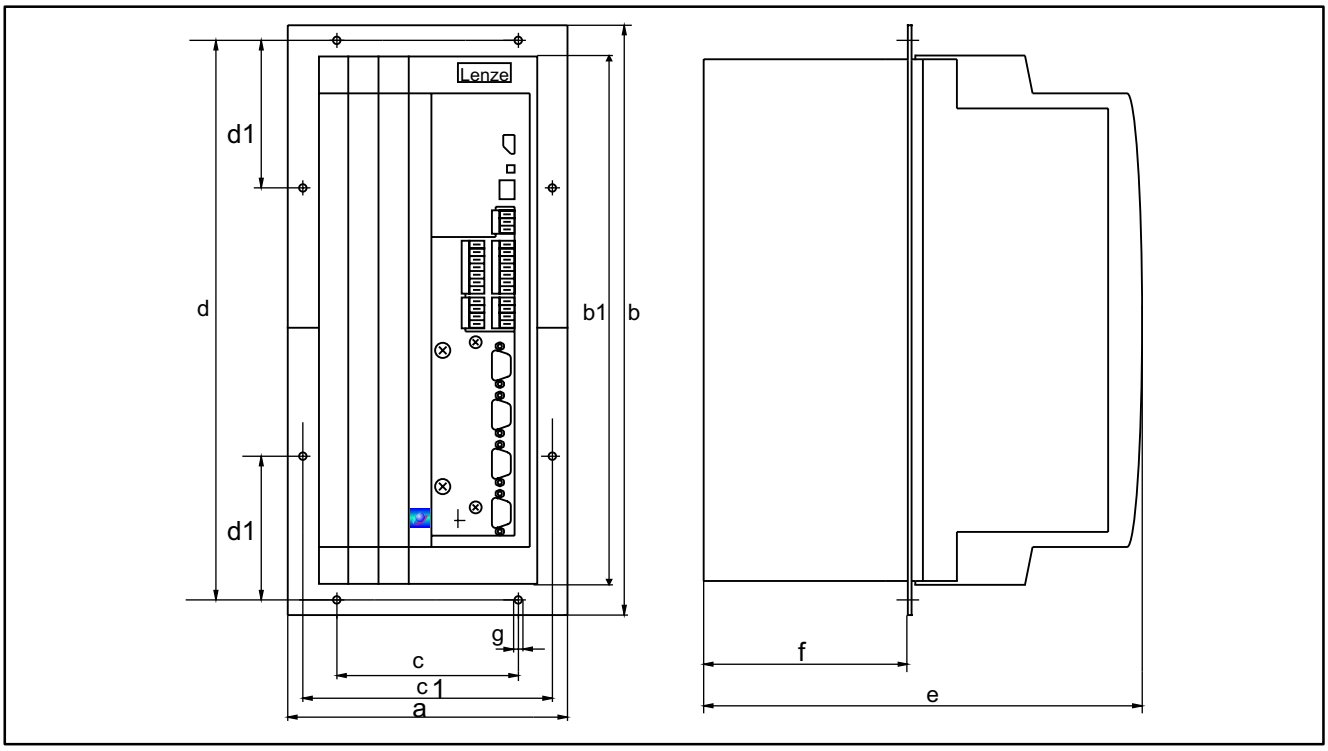

Fig. 4-2 Dimensions for the assembly with thermally separated power stage

Type	a	b	b1	c	c1	d	d1	e*	f	g
9321, 9322	112.5	385.5	350	60	95.5	365.5	105.5	250	92	6.5
9323, 9324	131.5	385.5	350	79	114.5	365.5	105.5	250	92	6.5
9325, 9226	135	385.5	350	117	137.5	365.5	105.5	250	92	6.5

* When using an attachable fieldbus module:
Observe the free space required for the connection cables

All dimensions in mm

Assembly cut-out

Type	Height	Width
9321, 9322	350 ±3	82 ±3
9323, 9324		101 ±3
9325, 9326		139 ±3

Dimensions for the types 9327 to 9329

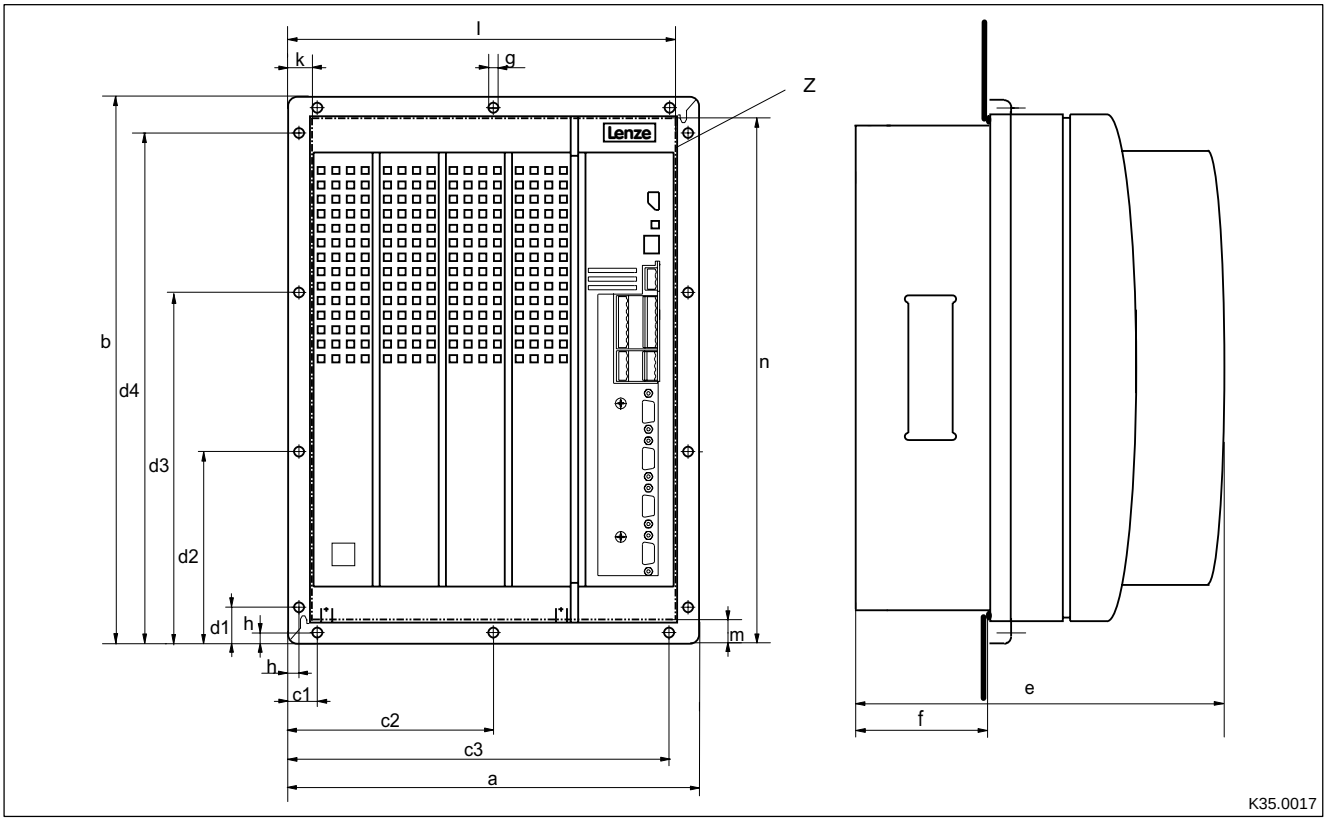

Fig. 4-3 Dimensions for the assembly with thermally separated power stage

Type	a	b	c1	c2	c3	d1	d2	d3	d4	e *)	f	g	h
9327, 9328, 9329	280	379	28	140	252	41	141	238	338	250	90	6	9

Assembly cut-out Z

Type	Height	Width	k	l	m	n
9327, 9328, 9329	338 ±1	238 ±1	20 ±2	259 ±2	20 ±2	359 ±2

* When using an attachable fieldbus module:
Observe the free space required for the connection cables

All dimensions in mm

4.1.4 Assembly of variants

Variant EVS932X-Cx (”Cold plate”)

For installation in a control cabinet with other heat sinks in ”cold plate technique”
(x = order designation; more information on the inner cover page).

Dimensions for the types 9321-Cx to 9326-Cx

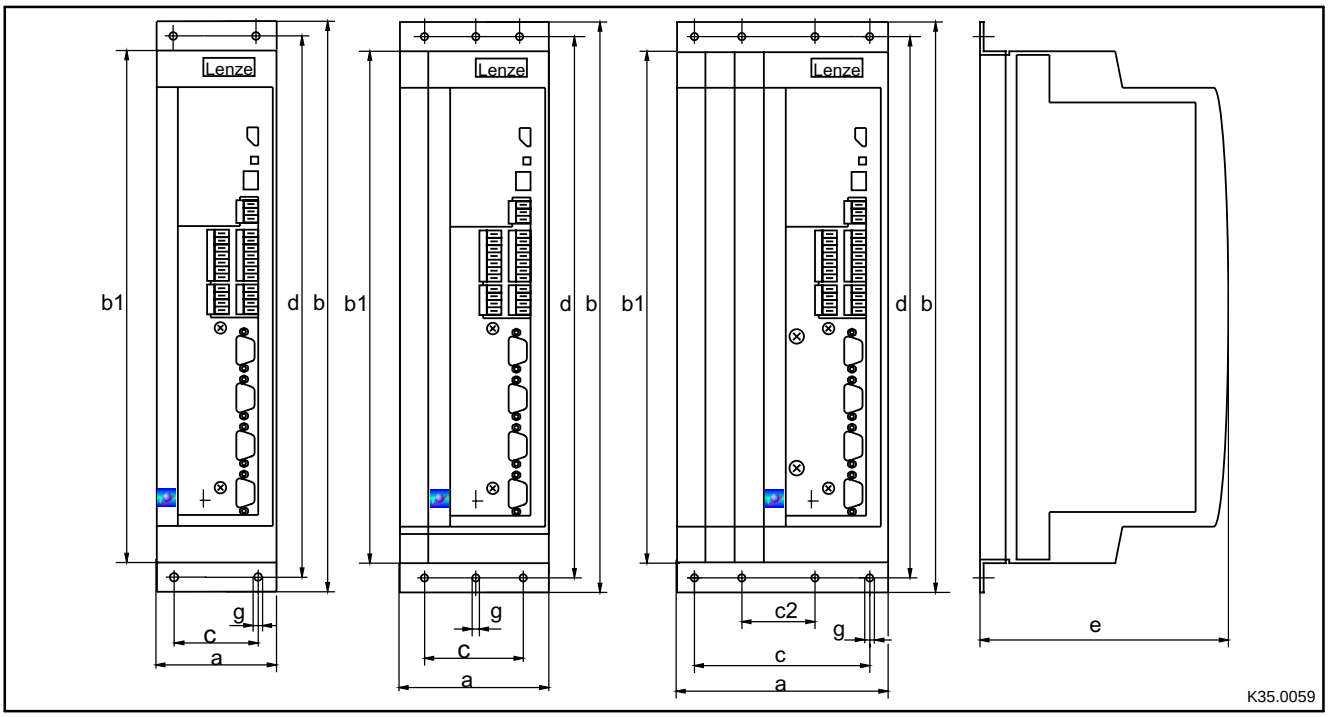

Fig. 4-4 Dimensions for the assembly in ”cold plate technique”

Type	a	b	b1	c	c2	d	e*	g
9321-Cx 9322-Cx	78	381	350	48	-	367	168	6.5
9323-Cx 9324-Cx	97	381	350	67	-	367	168	6.5
9325-Cx 9326-Cx	135	381	350	105	38	367	168	6.5

* When using an attachable fieldbus module:
Observe the free space required for the connection cables

All dimensions in mm

Dimensions for the types 9327-Cx and 9328-Cx

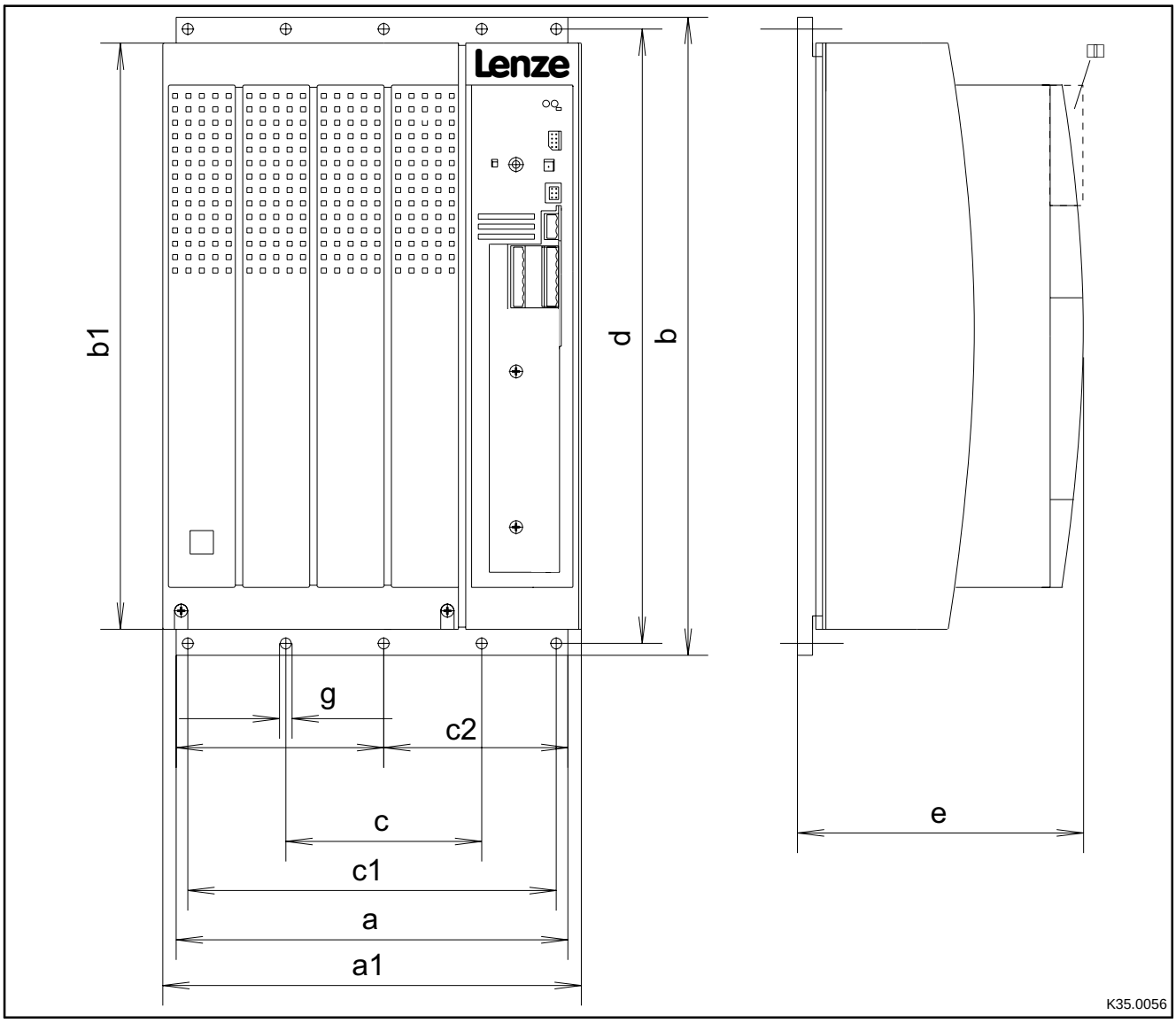

Fig. 4-5 Dimensions for the assembly in "cold plate technique"

Type	a	a1	b	b1	c	c1	c2	d	e*	g
9327-Cx 9328-Cx	234	250	381	350	110	220	117	367	171	6.5

* When using an attachable fieldbus module:
Observe the free space required for the connection cables

All dimensions in mm

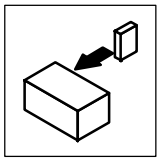

Installation

- Observe the following points to comply with the technical data:
  – Ensure sufficient ventilation of the heat sink.
  – The free space behind the control cabinet back panel must be at least 500 mm.
- If several controllers are installed in the control cabinet:
  – Do not install the controllers on top of each other.
- The cooling path must not exceed the thermal resistances stated in the table:

Controller	Cooling path	
Type	Power to be dissipated P_{loss} [W]	$R_{thmax\ heat\ sink}$ [K/W]
9321-Cx	80	0.50
9322-Cx	80	0.50
9323-Cx	100	0.40
9324-Cx	155	0.25
9325-Cx	210	0.19
9326-Cx	360	0.10
9327-Cx	410	0.09
9328-Cx	610	0.06

- The temperature of the cold plate must not exceed +85 C.
- Insertion depth t of the screws into the base plate of the controller:

$$8\ \text{mm} \leq t \leq 10\ \text{mm}$$

- For the bore pattern and surface quality of the heat sink please consult the factory.
- Apply the heat-conductive compound (accessory kit) to the cold plate of the controller.

4.2 Electrical installation

For information about the installation according to EMC, see chapter 4.3. (📖 4-33)

4.2.1 Protection of persons

Danger!

All power terminals carry voltage up to 3 minutes after mains disconnection.

4.2.1.1 Residual-current circuit breakers

Labelling of RCCBs	Meaning
∼	AC-sensitive residual-current circuit breaker (RCCB, type AC)
∼	Pulse-current sensitive residual-current circuit breaker (RCCB, type A)
⎓ ∼	All-current sensitive residual-current circuit breaker (RCCB, type B)

Definition

In the following text “RCCB” is used for “residual-current circuit breaker”.

Protection of persons and animals

DIN VDE 0100 with residual-current operated protective devices (RCCB):

- The controllers are equipped with a mains rectifier. If a short-circuit to frame occurs, a smooth DC residual current can block the activation of the DC sensitive or pulse-current sensitive RCCBs and thus destroy the protective function for all units connected. We therefore recommend:
  - ”pulse-current sensitive RCCB” or ”all-current RCCB” in systems equipped with controllers with single-phase mains connection (L1/N).
  - ”all-current sensitive RCCB” in systems equipped with controllers with three-phase mains connection (L1/L2/L3).

Rated residual current

Please observe the rated residual current for the selection of the RCCB:

- Controller with single-phase mains connection: 30 mA rated residual current
- Controller with three-phase mains connection: 300 mA rated residual current

The RCCB can be activated unintentionally under the following conditions:

- In the event of capacitive leakage currents between the cable screens (especially with wall mounting).
- Simultaneous connection of several inverters to the mains
- If RFI filters are used.

Installation

The RCCB must only be installed between the supplying mains and the controller.

Standards (All-current sentitive RCCB)

All-current sensitive RCCBs are described in the European Standard EN EN 50178 and in the IEC 755.
The EN 50178 has been harmonized and has been effective since October 1997. It replaces the national standard VDE 0160.

4.2.1.2 Insulation

The controllers have an electrical isolation (insulating distance) between the power terminals and the control terminals as well as to the housing:

- Terminals X1 and X5 have a double basic insulation (double insulating distance, safe mains isolation to VDE0160, EN50178). The protection against contact is ensured without any further measures.
- The control inputs and outputs of all controllers are electrically isolated.

Danger!

- Terminals X3, X4, X6, X7, X8, X9, X10 have a single basic insulation (single insulating distance).
- Protection against contact in the event of fault is ensured only by additional measures.
- If an external voltage supply (24V DC) is used, the insulation level of the controller depends on the insulation level of the voltage source.

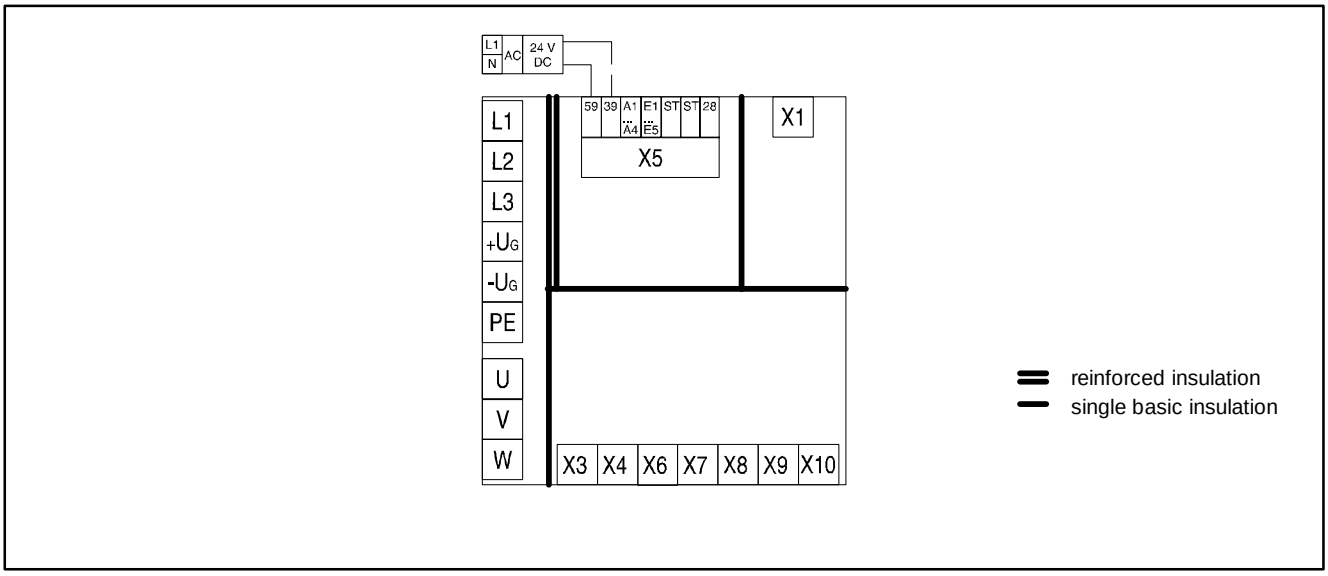

Fig. 4-6 Basic insulation in the controller

4.2.1.3 Replacement of defective fuses

Replace defective fuses with the prescribed type only when no voltage is applied. (📖 3-5)

- For single drives, the controller carries a hazardous voltage up to three minutes after mains disconnection.
- In a DC-bus connection, all controllers must be inhibited and separated from the mains.

4.2.1.4 Mains disconnection

Make a safety disconnection between the controller and the mains only via a contactor at the input side.

- Please observe that all drives connected to the DC bus must be inhibited.

4.2.2 Protection of the controller

Stop!

The controllers contain electrostatically sensitive components.

- Prior to assembly and service operations, the personnel must be free of electrostatic charge:
  – Discharge by touching the PE fixing screw or another grounded metal part in the control cabinet.

- Length of the screws for the connection to the screen cable/screen plate for the types 9327 to 9332: < 12 mm
- Controller protection by means of external fuses. (📖 3-5)
- Protect unused control inputs and outputs with plugs or covers (included in the contents of delivery) for the Sub-D inputs.
- Frequent mains switching can overload the internal switch-on current limitation. For cyclic mains switching, the controller can be switched on every three minutes as a maximum.
- The controllers 9324, 9326, 9328 and 9329 must only be operated with the appropriate mains filters. (📖 3-6)
- In case of condensation, connect the controller to the mains voltage only after the visible humidity has evaporated.

4.2.3 Motor protection

- Complete motor protection according to VDE:
  – By overcurrent relays or temperature monitoring.
  – Required for group drives (motors connected in parallel to a controller)
  – We recommend the use of PTC thermistors or thermostats with PTC characteristic to monitor the motor temperature.

Stop!

As standard Lenze three-phase AC motors are equipped with PTC thermistors. If motors from other manufacturers are used, carry out all steps required for the adaptation to the controller. (📖 4-28)

- When using motors with insulation which is not suitable for inverter operation:
  – Please contact your motor supplier.
  Lenze AC motors are designed for inverter operation.
- With the corresponding parameter setting, the controllers generate field frequencies up to 600 Hz:
  – With motors not suited for the application, dangerous overspeeds may occur and destroy the drive.

4.2.4 Mains types/conditions

Please observe the restrictions for each mains type!

Mains	Operation of the controllers	Notes
With grounded neutral (TT/TN mains)	No restrictions	Observe controller ratings ● Mains r.m.s. current: 📖 3-3
With isolated neutral (IT mains)	Possible, if the controller is protected in the event of an earth fault in the supplying mains. ● Possible, if appropriate earth fault detections are available and ● the controller is separated from the mains immediately.	Safe operation in the event of an earth fault at the inverter output cannot be guaranteed.
With grounded phase	Operation is only possible with one variant	Contact Lenze
DC-supply via $+U_G/-U_G$	The DC voltage must be symmetrical to PE.	The controller will be destroyed when grounding $+U_G$ or $-U_G$.

4.2.5 Interaction with compensation equipment

- The controllers take up a very low fundamental reactive power from the supplying AC mains. Therefore compensation is not necessary.
- If the controllers are operated at mains with compensation, this equipment must be used with chokes.
  – For this, contact the supplier of the compensation equipment.

4.2.6 Specification of all cables used

- The cables used must comply with the required approvals of the application site (e. g. UL).
- The prescribed minimum cross-sections of PE conductors must be maintained in all cases. The cross-section of the PE conductor must be at least as large as the cross-section of the power connections.
- The screening quality of a cable is determined by
  – a good screen connection
  – a low screen resistance
    Only use screens with tin-plated or nickel-plated copper braids!
    Screens of steel braid are not suitable.
  – For the overlapping degree of the screen braid:
    A min. of 70 % to 80 % with an overlapping angle of 90°

4.2.7 Power connections

Controller	Preparations for the power connection
9321 ... 9326	● Remove the covers of the power connections: – Unlatch to the front by gentle pressure. – Pull upwards (mains connection) or downwards (motor connection).
9327 ... 9332	● Remove cover: – Loosen screws (X) (see Fig. 4-1). – Swing cover to the top and detach. – Take the accessory kit out of the interior of the controller.

4.2.7.1 Mains connection

Types 9321 to 9326	Types 9327 to 9332
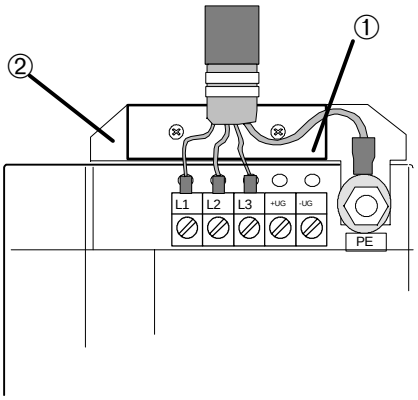	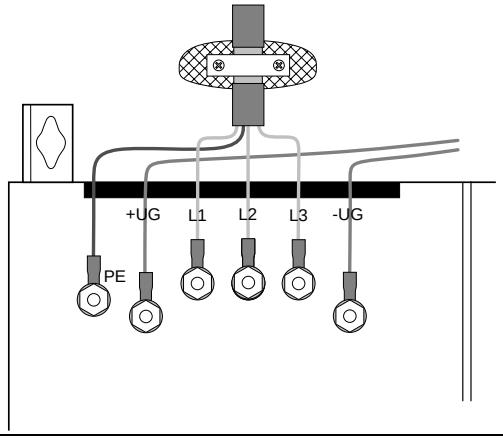
Correct screen connection with screened cables (required parts in the accessory kit): ● Screw sreen plate ① on fixing bracket ②. ● Fix screen using cable lugs. Do not use as a strain relief! ● To improve the screen connection: Connect screen additionally to the stud next to the power connections.	Correct screen connection with screened cables: ● Connect the screen with suitable clamp on the conducting control cabinet mounting plate. ● To improve the screen connection: Connect screen additionally to the stud next to the power connections.

Fig. 4-7 Proposal for mains connection

- Connect the mains cables to the screw terminals L1, L2, L3.
- Connect cables for brake unit (935X), supply module (934X) or further controllers in the DC bus connection to the screw terminals +UG, -UG at the top of the controller.
- Max. permissible cable cross-sections and tightening torques:

Type	Terminals		
	Max. permissible cable cross-sections	L1, L2, L3, +UG, -UG	PE connection
9321 - 9326	4 mm^2 1)	0.5 ... 0.6 Nm (4.4 ... 5.3 lbin)	3.4 Nm (30 lbin)
9327 - 9329	25 mm^2 2)	4 Nm (35 lbin)	
9330 - 9331	95 mm^2 2)	7 Nm (62 lbin)	
9332	120 mm^2 2)	12 Nm (106.2 lbin)	

1) with pin-end connector: 6 mm^2
with wire crimp cap 4 mm^2

2) with ring cable lug The cross-section is only limited by the cable cut-out in the housing.

Fuses

Fuses and cable cross-sections	The specifications in chapter 3.3.3 are recommendations and refer to the application ● in control cabinets and machines ● installation in the cable duct ● max. ambient temperature +40 °C.	🕮 3-5
Selection of the cable cross-section	For selection take into account the voltage drop in the event of load application (to DIN 18015 part 1: ≤ 3 %).	
Cable and controller protection on the AC side (L1, L2, L3)	● By means of standard commercial fuses. ● Fuses in UL-conform plants must have UL-approval. ● The rated voltages of the fuses must be dimensioned according to the mains voltage at the site. The activation characteristic is defined with ”H” or ”K5”.	
Cable and controller protection on the DC side (+UG, -UG)	● By means of recommended DC fuses. ● The fuses/fuse holders recommended by Lenze are UL approved.	
For DC group drives or supply using a DC source:	Observe the information given in Part F of the Manual.	
Connection of a brake unit	If the unit is connected to the terminals +UG / -UG, the fuses and cross-sections indicated in chapter 3.3.3 are not valid. These unit-specific data can be obtained from the technical documentation for the brake unit.	
Further information	For cable and controller protection see the chapter ”Accessories” in “Planning”.	
Further standards	The compliance with other standards (e.g.: VDE 0113, VDE 0289, etc.) remains the responsibility of the user.	

4.2.7.2 Motor connection

For EMC safety reasons, we recommend the use of screened motor cables.

Note!

The screening of the motor cables is only required to comply with existing standards (e. g. VDE 0160, EN 50178).

Types 9321 to 9326	
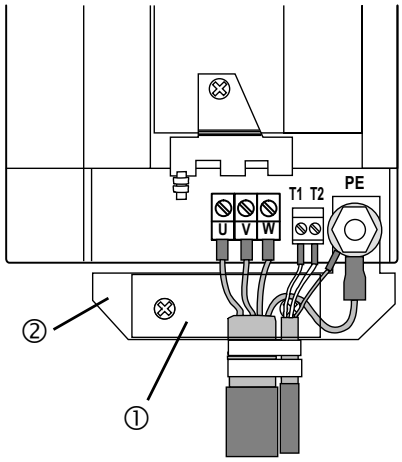	Correct screen connection with screened cables (required parts in the accessory kit): ● Screw sreen plate ① on fixing bracket ②. ● Fix the screen of the motor cable and thermal contact, if necessary. Do not use as a strain relief! ● To improve the screen connection: Connect screen additionally to the stud PE next to the motor connections.
Types 9327 to 9329	
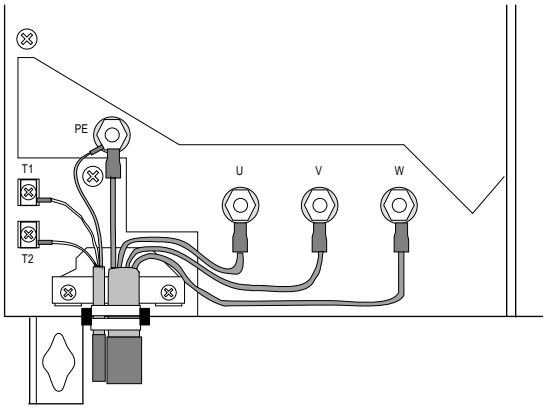	Correct screen connection with screened cables: ● Fix the screen of the motor cable and thermal contact, if necessary. Do not use as a strain relief! ● To improve the screen connection: Connect screen additionally to the stud PE next to the motor connections.

Installation

Types 9330 and 9331

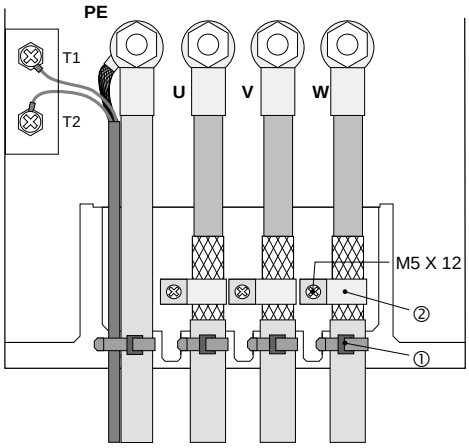

- Strain relief by using cable binders ①.
- Correct screen connection with screened cables:
  - Apply motor cable screen to the screening plate using clamp and screws M5x12 ②.
  - Connect thermal contact screen to the stud PE next to the motor connections over a large surface.

Type 9332

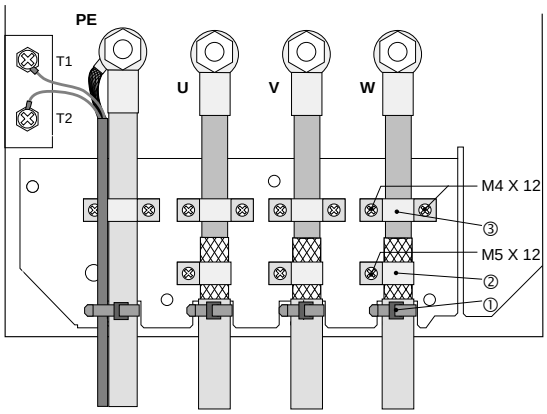

- Strain relief by using cable clamps and screws M4x12 ③.
  - Additional strain relief/fixing can be achieved by using cable binders ①.
- Correct screen connection with screened cables:
  - Apply motor cable screen to the screening plate using clamp and screws M5x12 ②.
  - Connect thermal contact screen to the stud PE next to the motor connections over a large surface.

Fig. 4-8 Proposal for motor connection

- Observe the max. permissible motor cable length:

	V_r = 400 V (+10%)		V_r = 480 V (+10%)	
Type	f_{chop} = 8 kHz	f_{chop} = 16 kHz	f_{chop} = 8 kHz	f_{chop} = 16 kHz
9321/9322	up to 50 m	up to 45 m	up to 50 m	up to 25 m
9323 - 9332	up to 50 m	up to 50 m	up to 50 m	up to 50 m

- Connect the motor cables to the screw terminals U, V, W.
  – Observe correct pole connection.
  – Max. motor cable length: 50 m.
  – Max. permissible cable cross-sections and tightening torques:

Type	Max. permissible cable cross-sections		Terminal screw tightening torques			
	Power connections	T1, T2	U, V, W	PE connection	Screen/ strain relief	T1, T2
9321 - 9326	4 mm² 1)	1.5 mm²	0.5 ... 0.6 Nm (4.4 ... 5.3 lbin)	3.4 Nm (30 lbin)	-	0.5 ... 0.6 Nm (4.4 ... 5.3 lbin)
9327 - 9329	25 mm² 2)		4 Nm (35 lbin)		-	0.5 ... 0.6 Nm (4.4 ... 5.3 lbin)
9330 - 9331	95 mm² 2)		7 Nm (62 lbin)		3.4 Nm (30 lbin)	
9332	120 mm² 2)		12 Nm (106.2 lbin)		M4: 1.7 Nm (15 lbin) M5: 3.4 Nm (30 lbin)	

1) with pin-end connector: 6 mm²
with wire crimp cap 4 mm²
2) with ring cable lug The cross-section is only limited by the cable cut-out

Note!

Switching on the motor side of the controller is permitted for safety switch-off only (emergency switch-off).

4.2.7.3 Connection of a brake unit

- When connecting a brake unit (brake module with internal brake resistor or brake chopper with external brake resistor) observe the corresponding Operating Instructions in all cases.

Stop!

- Design the circuit so that, if the temperature monitoring of the brake unit is activated,
  – the controllers are inhibited (X5/28 = LOW).
  – the mains is disconnected.
- Examples:
  – Chapter 4.3, “Installation of a CE-typical drive system”. (📖 4-33)
  – Fig. 4-9, “Decentralized supply for DC-bus connection of several drives”. (📖 4-18)

4.2.7.4 DC-bus connection of several drives

Decentralized supply with brake module

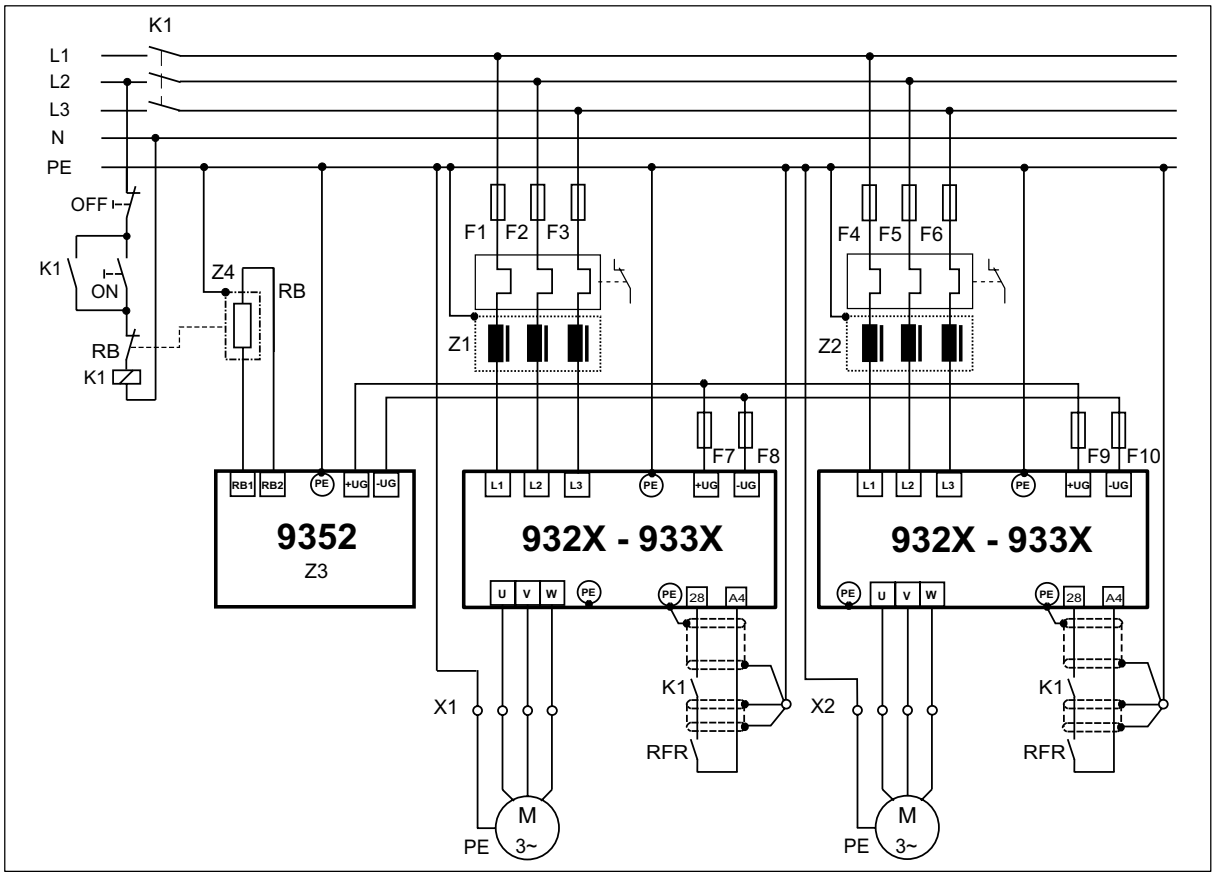

Fig. 4-9 Decentralized supply with DC-bus connection of several drives

Z1, Z2	Mains filter (for selection see Manual, Part F)
Z3	Brake chopper
Z4	Brake resistor (for r.m.s. current monitoring see the Manual, Part F)
F1...F6	Fuses (see chapter 3.3.3 and chapter 4.2.7.1)
F7...F10	DC-bus fuse (see chapter 3.3.3 / 4.2.7.1); fuse holder with/without alarm contact
K1	Main contactor

Stop!

- Set the DC bus voltage thresholds of controller and brake unit to the same values.
  – Controller using C0173
  – Brake unit with switches S1 and S2
- Use a bimetal relay to monitor the mains supply.

Note!

Observe the information given in Part F of the Manual and the application report “DC-bus connection” for selection of the components.

Central supply with supply module

- Observe the corresponding Operating Instructions for installation of a supply module.

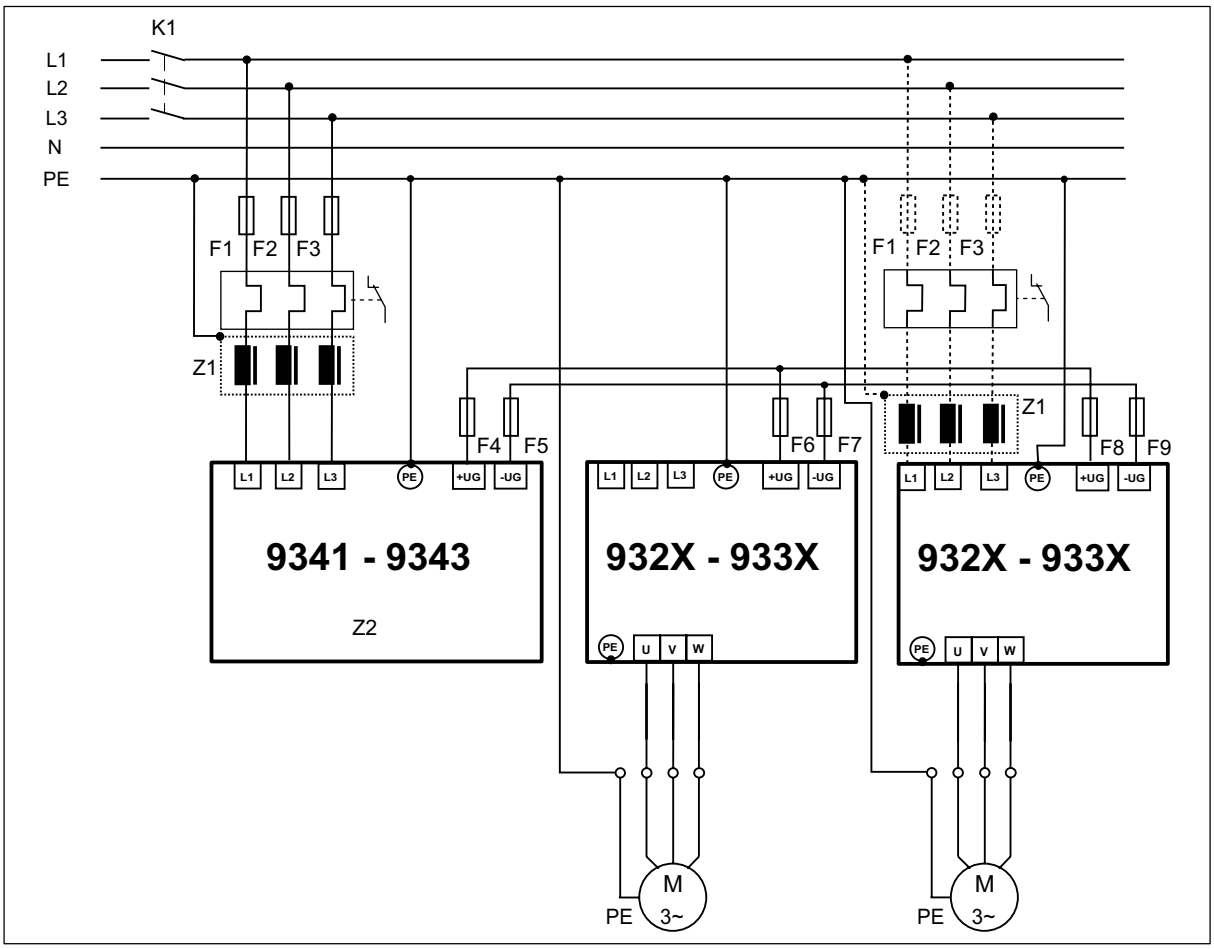

Fig. 4-10 Central supply for DC bus connection of several drives

Z1	Mains filter
Z2	Supply module
F1...F6	Protection, see “Cable protection” (📖 3-5) / “mains connection” (📖 4-13)
F4...F9	DC-bus fuse (see chapter 3.3.3 / 4.2.7.1); fuse holder with/without alarm contact
K1	Main contactor

Note!

If the power supply of the supply module is not high enough, a parallel supply can be installed via the mains input of other controllers (see Manual, Part F). In this event, the controller can only be operated with the assigned mains filters (min. limit value class A).

4.2.8 Control connections

4.2.8.1 Control cables

- Connect control cables to the screw terminals:

max. permissible cable cross-section	Screw-tightening torques
1.5 mm^2	0.5 ... 0.6 Nm (4.4 ... 5.3 lbin)

- We recommend a one-side screening of all cables for analog signals to avoid signal distortion.
- Connect the screens of the control cables
  – with the collective screen plate to the front metal surface (max screw length 12 mm).

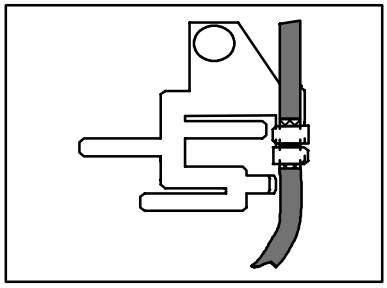

4.2.8.2 Assignment of the control terminals

Protection against inverse polarity

- This protection prevents the wrong connection of the internal control inputs.It is however possible to overcome the protection against polarity reversal by applying great force. The controller cannot be enabled in this case.

Overview

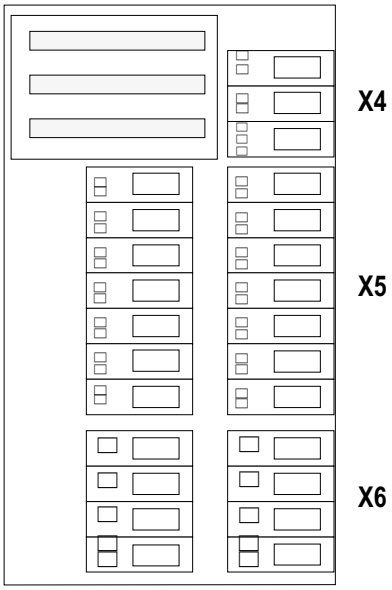

Fig. 4-11 Layout of the control connections on the front of the controller

	Terminal	Use **(Default setting is printed in bold)**		Level	Data
Analog inputs	1, 2	Difference input master voltage **(not assigned)**	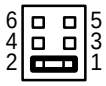 Jumper X3	-10 V to +10 V	Resolution: 5 mV (11 bit + sign)
		Difference input master current	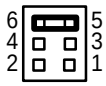 Jumper X3	-20 mA to +20 mA	Resolution: 20 µA (10 bit + sign)
	3, 4	Difference input master voltage **(not assigned)**	Jumper X3 has no effect	-10 V to +10 V	Resolution: 5 mV (11 bit + sign)
Analog outputs	62	Monitor 1 **(Actual speed)**		-10 V to +10 V; max. 2 mA	Resolution: 20 mV (9 bit + sign)
	63	Monitor 2 **(torque setpoint)**		-10 V to +10 V; max. 2 mA	Resolution: 20 mV (9 bit + sign)
	7	Internal ground, GND		-	-
Digital inputs	28	Controller enable (RFR), reset		HIGH, HIGH→LOW edge	LOW: 0 … +4 V HIGH: +13 … +30 V Input current at 24 V: 8 mA per input Reading and writing of the inputs: Term. 28, E1 - E3: 1 ms (average) E4, E5: < 10 µs
	E1	freely assignable **(Reset QSP)**		HIGH	
	E2	freely assignable **(Register controller on)**		HIGH	
	E3	freely assignable **(Accept register mark)**		HIGH	
	E4	freely assignable **(Cylinder sensor, cylinder pulse)**		LOW→HIGH edge	
	E5	freely assignable **(Register mark sensor, register mark pulse)**		LOW→HIGH edge	
Digital outputs	A1	freely assignable **(Register control active)**		HIGH	LOW: 0 … +4 V HIGH: +13 … +30 V Output current: max. 50 mA per output (external resistor at least 480 Ω at 24 V) Updating of the outputs: once per ms
	A2	freely assignable **(Register control initialized)**		HIGH	
	A3	freely assignable **(Controller ready)**		HIGH	
	A4	freely assignable **(Register mark out of mark window)**		HIGH	
	39	Ground of the digital inputs and outputs		-	
	59	Supply input of the control module: 24 V external (I > 1A)		-	

Tip!

To change the jumper, remove plug-on module, if necessary.

4.2.8.3 Connection diagrams

Connection of analog signals

Analog signals are connected via the 2 x 4-pole terminal block X6.

Depending on the use of the analog input, the jumper of X3 must be set accordingly.

Connection for external voltage supply	
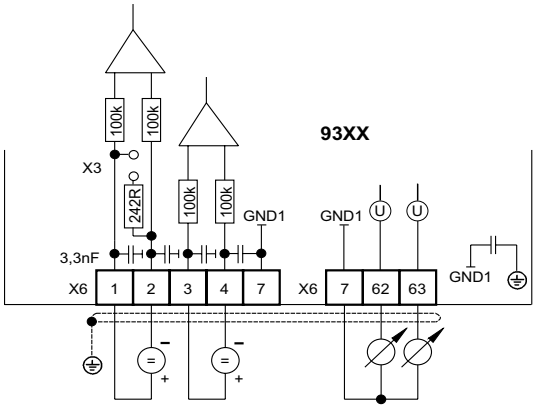	**STOP!** ● The maximum permitted voltage difference between an external voltage source and theGND1 (terminal X6/7) of the controller is 10V (common mode). ● The maximum permitted voltage difference between GND1 (terminal X6/7) and the PE of the controller is 50V.
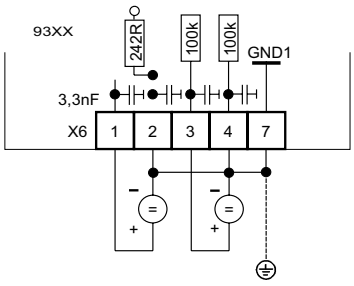	Limit the voltage difference ● by overvoltage clamping components or ● by direct connection of terminal(s) X6/2, X6/4 and X6/7 to GND1 and PE (see figure).

Connection for internal voltage supply	
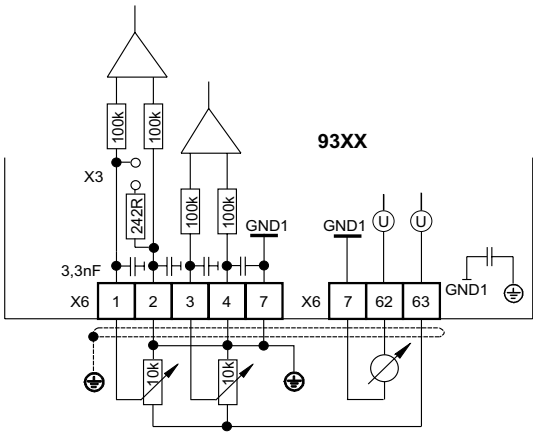	Configuration of the internal voltage supply: ● Set a freely assignable analog output (AOUTx) to HIGH level. ● For instance terminal X6/63: Assign FIXED100% to C0436 (📖 7-13), 10V are thus applied across terminal X6/63. **Note!** Use one of the predefined configurations in C0005 for this application. With C0005 = XX1X (e. g. 1010 for speed control with control via terminals) FIXED 100% is automatically assigned to the output X6/63 (corresponds to 10 V at the output X6/63).

Connection of digital signals

Digital signals are connected via the 2 x 7-pole terminal block X5.

The levels of the digital inputs and outputs are PLC compatible.

Only use relays with low-current contacts for the switching of the signal cables (recommendation: relays with gold-plated contacts).

Connection for external voltage supply

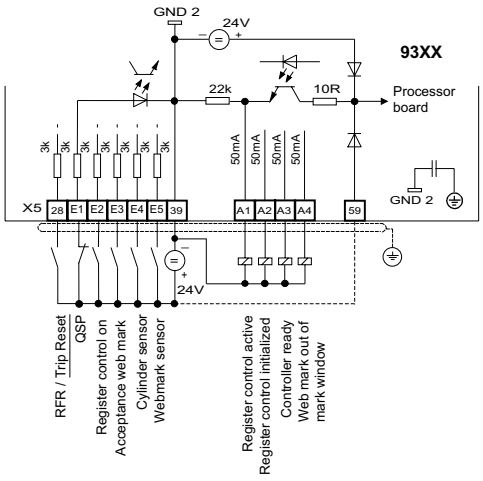

The external voltage source supplies the digital inputs and outputs.

- If the external supply voltage is also to be used as an alternative supply of the control electronics (backup operation in case of mains failure):
  - For this, make the connection illustrated as a broken line.
  - The external voltage source must be able to drive a current > 1A.

This ensures that all actual values, even after mains disconnection, are still detected and processed.

- Connection of the external voltage source:
  - supply voltage at X5/59
  - external ground at X5/39

STOP!

The maximum permitted voltage difference between GND2 (terminal X5/39) and the PE of the controller is 50 V.

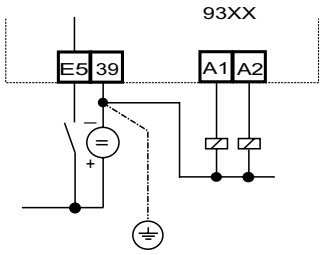

Limit the voltage difference

- by overvoltage clamping components or
- by a direct PE connection of terminal 39 (see figure).

Connection for internal voltage supply

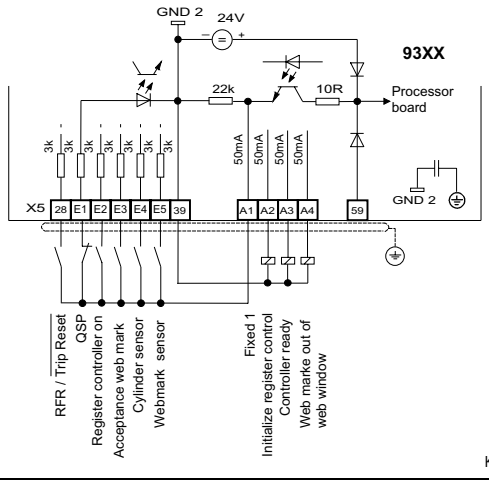

Configuration of the internal voltage supply

- Set a freely assignable digital output (DIGOUTx) to HIGH level.
- For instance terminal X5/A1: Assign C0117/1 with FIXED1. 📖 7-13
  24V are thus applied across terminal X5/A1.

Tip!

For this application, you may use one of the predefined configurations in C0005.The output X5/A1 is assigned automatically with FIXED1 (corresponds to 24V at terminal X5/A1) by C0005 = 300XX (e.g. 30010 for register control with control via terminals).

Installation

Digital frequency input (X9) / Digital frequency output (X10)

Tip!

For the connection to the digital frequency input (X9) or digital frequency output (X10), use prefabricated Lenze cables. Otherwise, only use cables with twisted pairs and screened wires (A, $\overline{A}$ / B, $\overline{B}$ / Z, $\overline{Z}$) (see connection diagram).

Digital frequency output X10	Digital frequency input X9
Features: ● Sub-D female connector, 9-pole ● Output frequency: 0 - 500 kHz ● Current capacity per channel: max 20mA. ● Two-track with inverse 5 V signals and zero track ● X10 has a different basic setting depending on the selected configuration (C0005) – Default setting: Output of the digital frequency input signal of X9 (connect-through) ● Load capacity: – Parallel connection: up to three slaves – Series connection: at 250 kHz digital frequency: up to 22 slaves at 500 kHz digital frequency: up to 10 slaves ● When PIN 8 (EN) shows a LOW level, the master is initialized (e.g. if the mains was disconnected) . The slave can thus monitor the master.	Features: ● Sub-D male connector, 9-pole ● Input frequency: 0 - 500 kHz ● Current capacity per channel: max 6mA. ● Two-track with inverse 5 V signals and zero track ● Possible input signals: – Incremental encoder with two 5V complementary signals shifted by 90°(TTL encoder) – Encoder simulation of the master ● PIN 8 serves to monitor the cable or the connected controller: – When this PIN shows a LOW level, the SD3 monitoring responds. – If the monitoring is not required, this input can be connected to +5V. ● The input is disconnected at C0540 = 0, 1, 2 or 3.

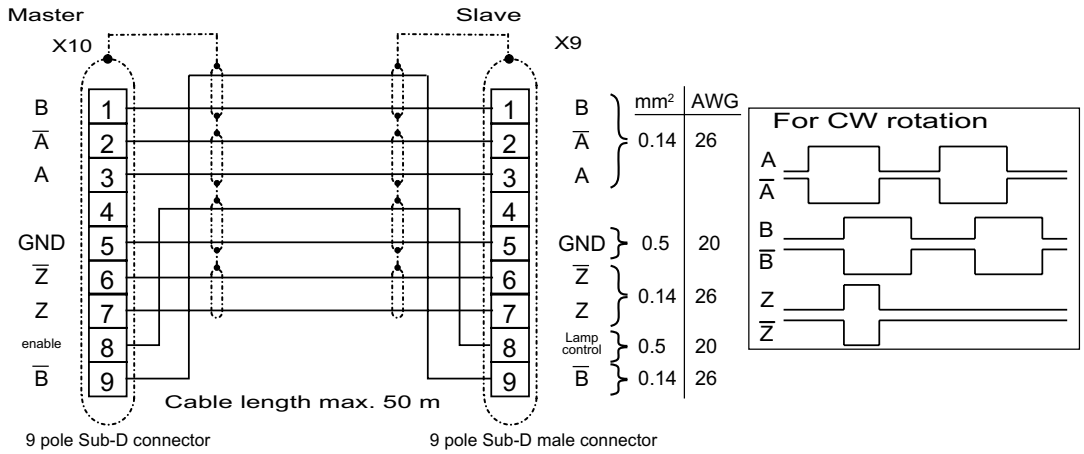

Pin assignment X10									Pin assignment X9								
1	2	3	4	5	6	7	8	9	1	2	3	4	5	6	7	8	9
B	A	A	+5 V	GND	Z	Z	EN	B	B	A	A	+5 V	GND	Z	Z	LC	B

STATE-BUS (X5/ST)

The STATE-BUS is a controller-specific bus system for simple monitoring in a network of drives:

- Controls all networked drives in a preselected state.
- Up to 20 controllers can be connected (overall length STATE-BUS < 5m).
- Connection to the STATE-BUS cables to terminals X5/ST.

Stop!

Do not apply an external voltage across terminals X5/ST.

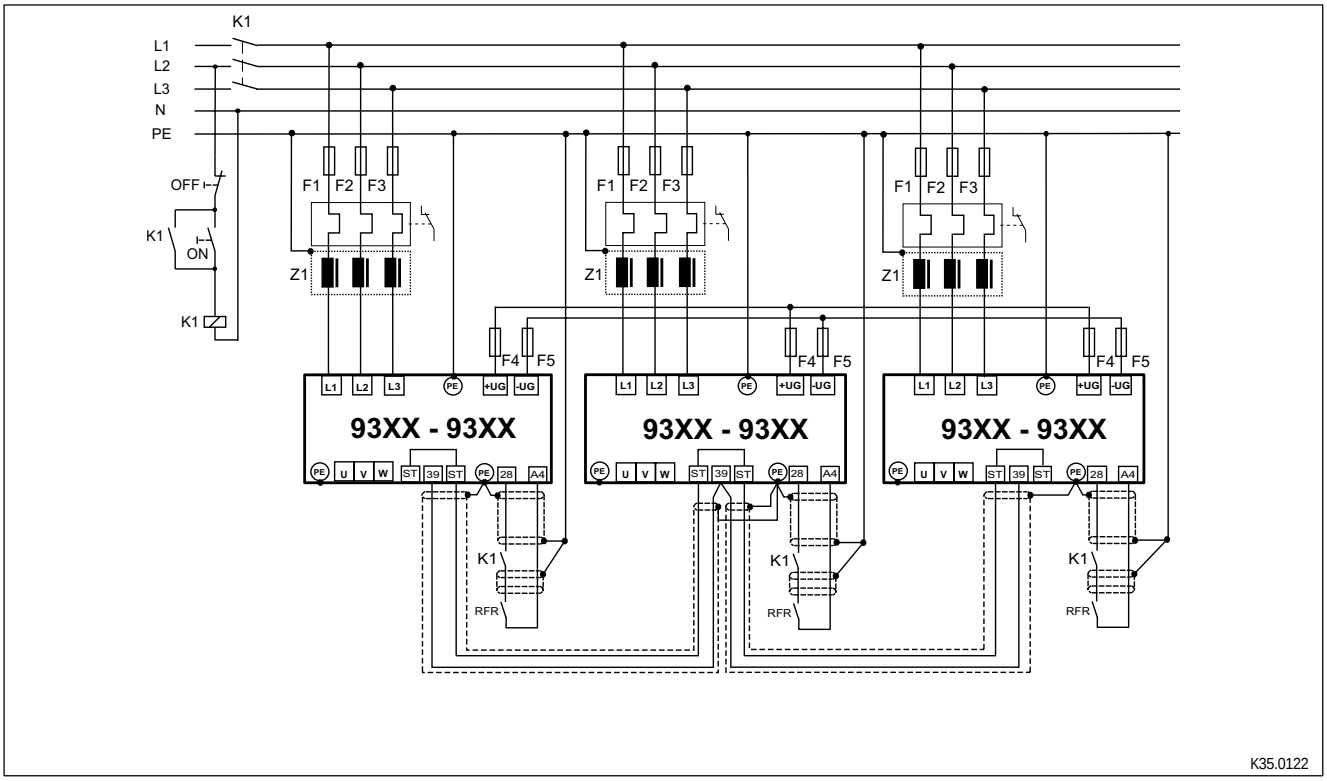

Fig. 4-12 Monitoring of a network of drives with the STATE-BUS

Z1	Mains filter
F1...F5	For fuses see “Cable protection” (📖 3-5) / “Mains connection” (📖 4-13)
K1	Main contactor

Installation

System bus connection (X4)

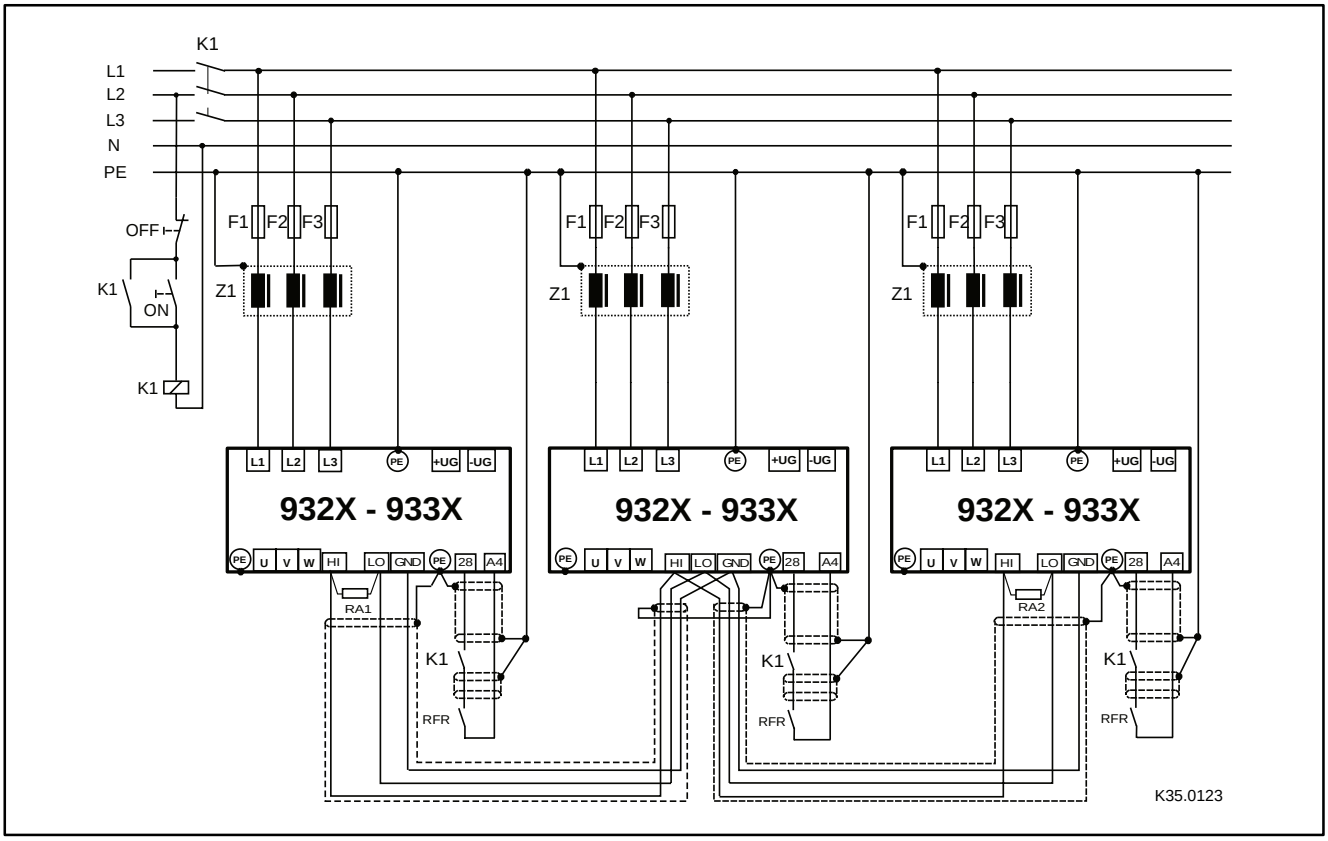

Fig. 4-13 Wiring of the system bus

RA1, RA2 Bus terminating resistors 120 Ω (included in the accessory kit)

- Connection via pluggable screw terminals (double terminals can be used).
- Only connect terminals of the same designation.
- Features of the signal cable:

Total cable length	**up to 300 m**	**300 m to 1000 m**
Cable type	LIYCY 2 x 2 x 0.5 mm^2 twisted pair with screening Pair 1: CAN-LOW (LO) and CAN-HIGH (HI) Pair 2: 2*GND	CYPIMF 2 x 2 x 0.5 mm^2 twisted pair with screening Pair 1: CAN-LOW (LO) and CAN-HIGH (HI) Pair 2: 2*GND
Cable resistance	≤ 40 Ω/km	≤ 40 Ω/km
Capacitance per unit length	≤ 130 nF/km	≤ 60 nF/km

- Connection of the bus termination resistors:
  – Connect one resistor 120 □ to the first and one to the last bus participant.
  – On the 93XX controller the resistor can be screwed directly under the terminals X4/HI and X4/LO.

Features:

- CAN based with bus protocol according to CANopen (CAL-based Communication Profile DS301)
- Bus expansion:
  – 25 m at max. 1 Mbit/s baud rate
  – up to 1 km with reduced baud rate
- Extremely reliable data transmission (hamming distance = 6)
- Signal level to ISO 11898
- Up to 63 bus devices are possible
- Access to all Lenze parameters
- Master functions integrated into the controller
  – Data exchange possible between controllers without participation of a master system (current ratio control, speed synchronization, etc.)

The following connections of the system bus connection are possible:

- Connection to a decentral terminal extension for digital and analog inputs and outputs
- Connection to a superimposed control (PLC, decentral digital inputs and outputs, keypad)
- Interconnection of several controllers

Automation interface (X1)

The automation interface (X1) is used for the connection of different plug-on modules

- Operating module
- Fieldbus modules
  – RS232, RS485, optical fibre, type 2102 (LECOM-A/B/LI),
  – INTERBUS, type 2111
  – PROFIBUS, type 2131

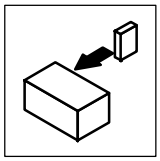

4.2.9 Motor temperature monitoring

Selection of the sensor type	• Continuous thermal sensor KTY – "Linear" thermal sensor in the motor winding (standard for Lenze motors MDXKX, MDXQA und MDXMA) • PTC thermistor – PTC thermistor with defined tripping temperature (acc. to DIN 44081 and DIN 44082) • Thermal contact TKO – Thermostat/normally-closed contact
Other monitoring	KTY, PTC and TKO do not offer a complete protection. To improve the monitoring, Lenze recommends the use of a bimetal relay.
Alternative monitoring	Comparators (CMP1 ... CMP3) monitor and a time element (TRANS1 ... TRANS4) limits the motor current for small speeds or motor standstill. You can also achieve this function by connecting suitable function blocks.
Reactions	different, depending on the type of temperature monitoring. 📖 7-180

Stop!

Do not connect an external voltage to the inputs.

	Lenze motors			**Motors of other manufacturers**		
	MDXKX, MDXQA and MDXMA		**with thermal contact**	**with sensor for continuous temperature detection**		**with thermal contact or PTC acc. to DIN 44081/44082**
Connection	• Resolver input X7: – Pin X7/8 = +, Pin X7/9 = - • Encoder input X8: – Pin X8/8 = +, Pin X8/5 = -		Terminals T1/T2 next to the terminals U, V, W	• Resolver input X7: – Pin X7/8 = +, Pin X7/9 = - • Encoder input X8: – Pin X8/8 = +, Pin X8/5 = -		Terminals T1/T2 next to the terminals U, V, W
Fault indication	(MONIT-)OH3	(MONIT-)OH7	(MONIT-)OH8	(MONIT-)OH3	(MONIT-)OH7	(MONIT-)OH8
Possible reactions	The corresponding monitoring and thus the following codes are preset under C0086					
	• Trip (C0583 = 0) • OFF (C0583 = 3)	• Warning (C0584 = 2) • OFF (C0584 = 3)	• Trip (C0585 = 0) • Warning (C0585 = 2) • OFF (C0585 = 3)	• Trip (C0583 = 0) • OFF (C0583 = 3)	• Warning (C0584 = 2) • OFF (C0584 = 3)	• Trip (C0585 = 0) • Warning (C0585 = 2) • OFF (C0585 = 3)
Tripping temperature	fixed at 150 ° C	adjustable 45°C ... 150°C (C0121)	fixed, (depending on the PTC/thermal contact): PTC: at R_ϑ > 1600 Ω	fixed at 150 °C	adjustable 45°C ... 150°C (C0121)	fixed, (depending on the PTC/thermal contact): PTC: at R_ϑ > 1600Ω
Notes	• Monitoring is active in the default setting. • If resolver (X7) and encoder (X8) are operated together: – Connect KTY only at one connector (X7 or X8) – Do not connect KTY connection of the other female connector • For further information on the connection of the thermal sensor, please consult the description of the feedback system		• Deactivate monitoring via X7 or X8 under C0583=3 and C0584=3 • The connection was carried out according to DIN 44081 (see also Fig. 4-14).	• Deactivate monitoring via X7 or X8 under C0583=3 and C0584=3		• Deactivate monitoring via X7 or X8 under C0583=3 and C0584=3 • The connection was carried out according to DIN 44081 (see also Fig. 4-14). • We recommend a Ziehl PTC (up to 150 °C): K15301075 or a thermostat.

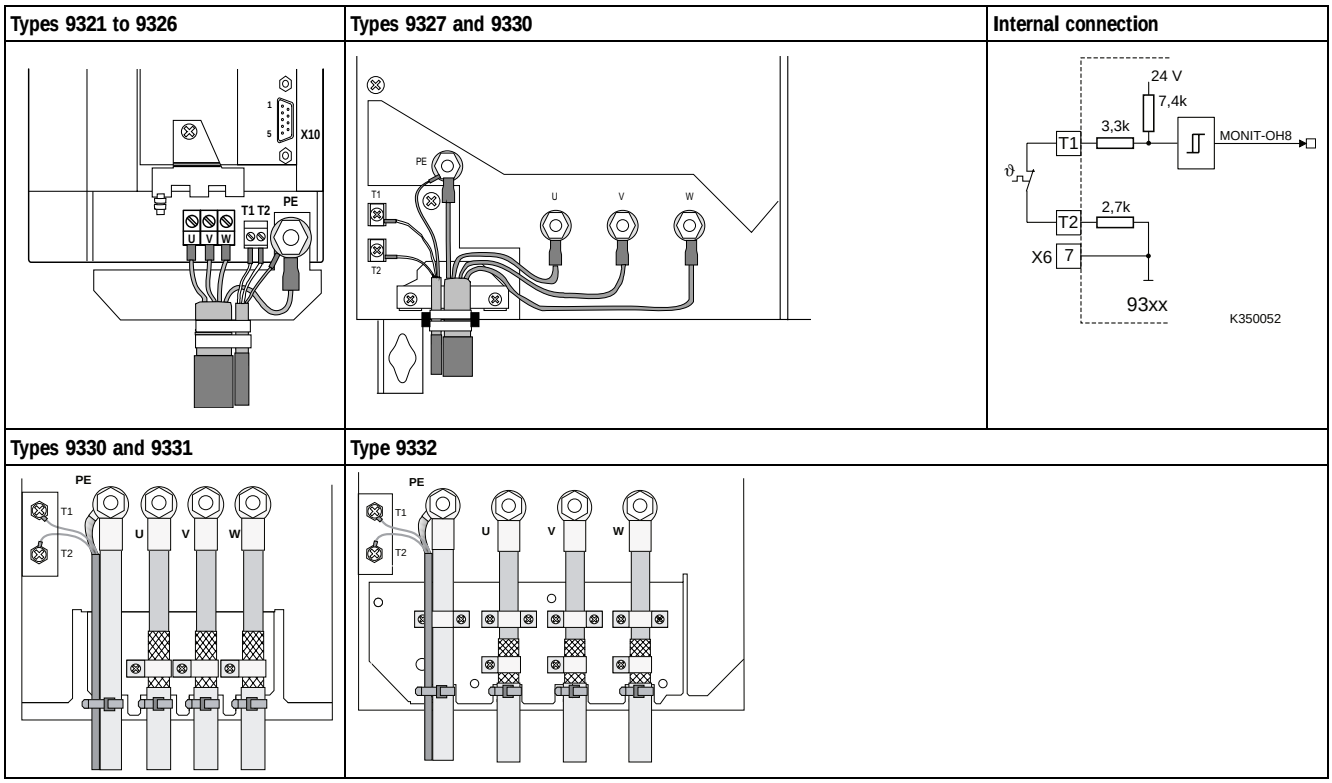

Fig. 4-14 Connection of a thermal switch to the terminals T1 and T2 and internal connection

Tip!

- In the prefabricated Lenze system cables for **Lenze servo motors** the cable for the temperature feedback is already included. The cables are designed for wiring according to EMC.
- If you use cables of your own:
  – Always lay cables separately from motor cables.

4.2.10 Feedback systems

Different feedback systems can be connected to the controller:

- Resolver feedback (factory setting)
- Encoder feedback
  – Incremental encoder TTL
  – Sin/cos encoder
  – Sin/cos encoder with serial communication (single turn)
  – Sin/cos encoder with serial communication (multi turn)

Resolver signal or encoder signal can be output for slaves at the digital frequency output X10.

- Connection as shown in the figures:
  – Use twisted pair cables and screened pair cables.
  – Connect the screen at both ends.
  – Use indicated cable cross-sections.
- The feedback system is activated under C0025.

Installation

Sensorless control SSC

The sensorless controller (SSC) should not be used for new drive solutions (C0025 = 1).

Instead, use a vector control EVF 9300 or contact Lenze.

Resolver connection (X7)

- In all configurations predefined under C0005, a resolver can be used as feedback system. An adjustment is not necessary.

Note!

Use prefabricated Lenze system cables for resolver connection.

Features:

- 2-pole resolver (V = 10 V, f = 4 kHz)
- Resolver and resolver cable are monitored for open circuit (fault indication Sd2)

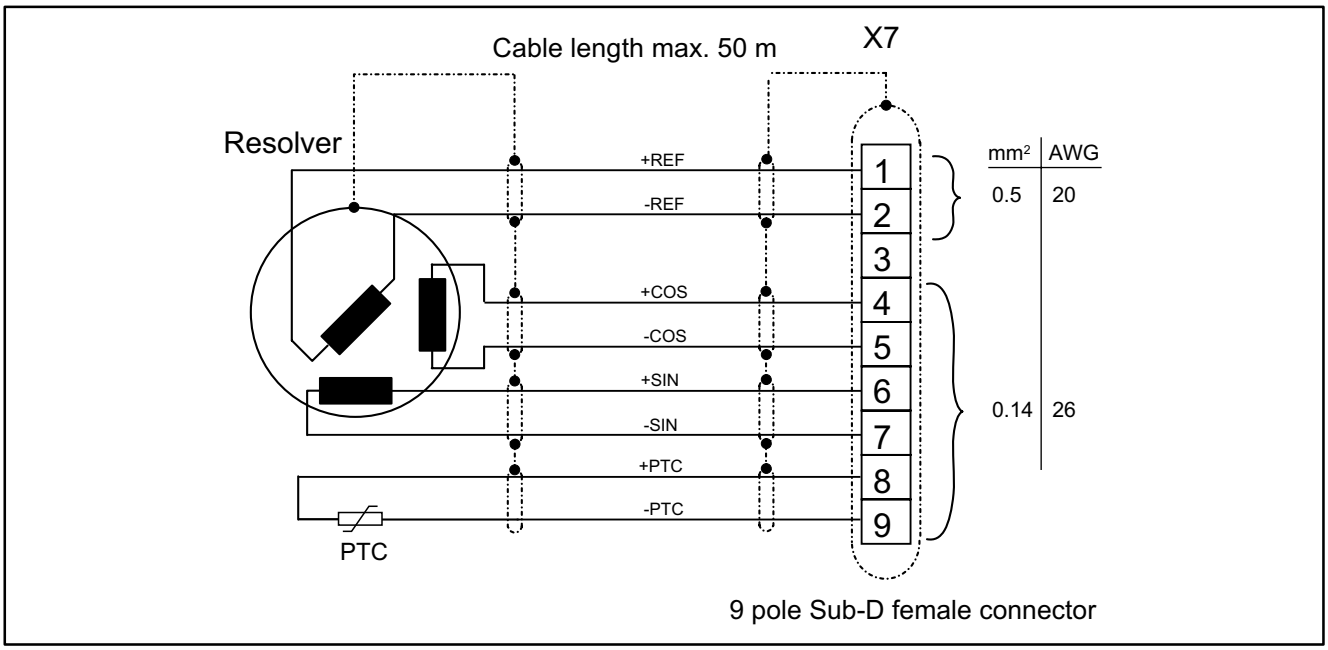

Fig. 4-15 Resolver connection

Assignment of the female connector (X7)									
Pin	**1**	**2**	**3**	**4**	**5**	**6**	**7**	**8**	**9**
Signal	+Ref	-Ref	GND	+COS	-COS	+SIN	-SIN	+PTC (📖 4-28)	-PTC (📖 4-28)

Encoder connection (X8)

An incremental encoder or a sin/cos encoder can be connected to this input.

Note!

Use prefabricated Lenze system cables for encoder connection.

- The encoder supply voltage V_{CC5_E} can be adjusted in the range from 5 V to 8 V under C0421
  – to set the encoder supply
  – to compensate the voltage drop on the encoder cable, if necessary
  □V □ 2 * cable length * resistance/m * $I_{encoder}$

Stop!

Observe the connection voltage of the encoder system used. If C0421 is set too high, the encoder might be destroyed.

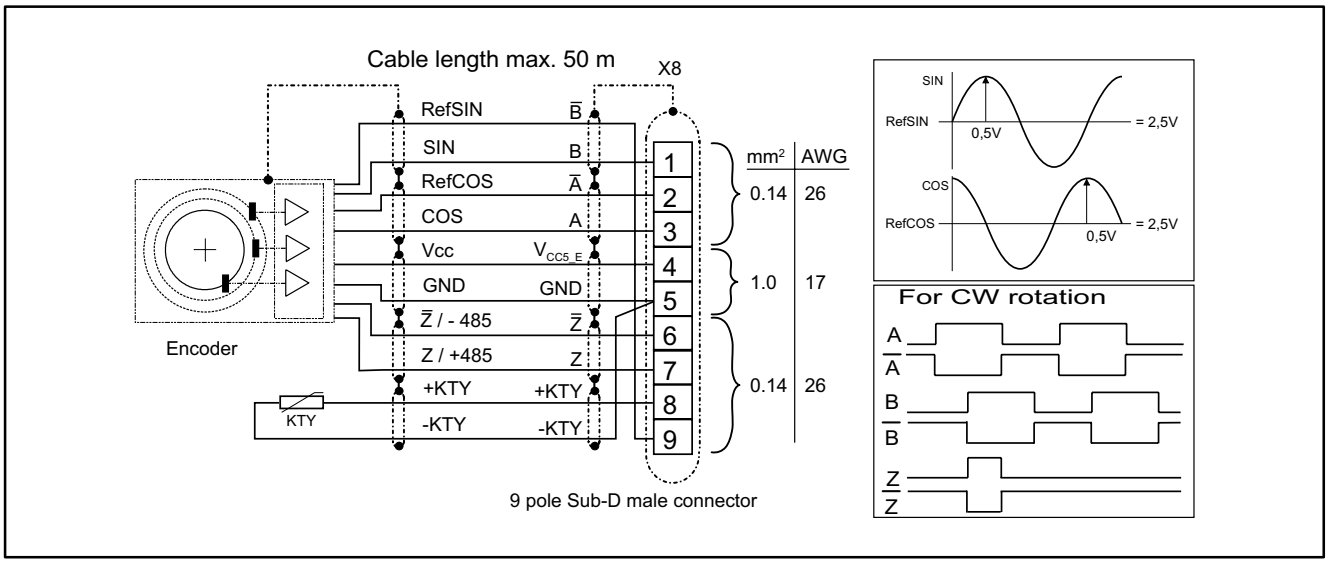

Fig. 4-16 Encoder connection

Installation

Incremental encoder

Features:

- Incremental encoders with two 5 V complementary signals shifted by 90 □ (TTL encoder) can be connected.
  – The zero track can be connected (as option).
- 9-pole Sub-D female connector
- Input frequency: 0 - 500 kHz
- Current consumption per channel: 6 mA

Assignment of the male connector (X8)									
Pin	**1**	**2**	**3**	**4**	**5**	**6**	**7**	**8**	**9**
Signal	B	$\overline{A}$	A	V_{CC5_E}	GND (-PTC)	$\overline{Z}$	Z	+PTC (📖 4-28)	$\overline{B}$

Sin/cos encoder

Features:

- The following encoders can be connected
  – sin/cos encoders with a rated voltage from 5 V to 8 V.
  – sin/cos encoders with a communication interface, type Stegmann SCS/M70xxx (The initialization time of the controller is increased to approx. 2 seconds).
- 9-pole Sub-D female connector
- Internal resistance Ri = 221 □
- Voltage sine and cosine track: 1 Vss ±0.2 V
- Voltage RefSIN and RefCOS: +2,5 V

Note!

For drives with track indications assign: sine, $\overline{\text{sine}}$ and cosine, $\overline{\text{cosine}}$:
Assign RefSIN with $\overline{\text{sine}}$ and RefCOS with $\overline{\text{cosine}}$.

Assignment of the male connector (X8)									
Pin	**1**	**2**	**3**	**4**	**5**	**6**	**7**	**8**	**9**
Signal	SIN	RefCOS	COS	V_{CC5_E}	GND (-PTC)	$\overline{Z}$ or -RS485	Z or +RS485	+PTC (📖 4-28)	RefSIN

4.3 Installation of a CE-typical drive system

General notes	● The electromagnetic compatibility of a machine depends on the type of installation and care taken. Please observe: – Assembly – Filters – Screening – Grounding ● For diverging installations, the conformity to the CE EMC Directive requires a check of the machine or system regarding the EMC limit values. This is for instance valid for – using unscreened cables – the use of group RFI filters instead of assigned RFI filters – operation without mains filter ● **The compliance of the machine application with the EMC Directive is in the responsibility of the user.** – If you observe the following measures, you can assume that the machine will operate without any EMC problems caused by the drive system, and that compliance with the EMC Directive and the EMC law is achieved. – If devices which do not comply with the CE requirement concerning noise immunity EN 50082-2 are operated close to the controller, these devices may be disturbed electromagnetically by the controllers.
Structure	● Connect controller, mains choke, and mains filter to the grounded mounting plate with a wire of as large a cross-section as possible: – Mounting plates with conductive surfaces (zinc-coated, stainless steel) allow permanent contact. – Painted plates are not suitable for the installation in accordance with the EMC. ● If you use several mounting plates: – Connect as much surface as possible of the mounting plates (e.g. with copper bands). ● Ensure the separation of motor cable and signal or mains cable. ● Do not use the same terminal strip for mains input and motor output. ● Cable guides as close as possible to the reference potential. Unguided cables have the same effect as aerials.
Filters	● Use mains filters or RFI filters and mains chokes which are assigned to the controller: – RFI filters reduce impermissible high-frequency interference to a permissible value. – Mains chokes reduce low-frequency interferences which depend on the motor cable and its length. – Mains filters combine the functions of mains choke and RFI filter.
Screening	● Connect the screen of the motor cable to the controller – to the screen connection of the controller. – additionally to the mounting plate with a surface as large as possible. – Recommendation: For the connection, use ground clamps on bare metal mounting surfaces. ● If contactors, motor-protecting switches or terminals are located in the motor cable: – Connect the screens of the connected cables also to the mounting plate, with a surface as large as possible. ● Connect the screen in the motor terminal box or on the motor housing to PE: – Metal glands at the motor terminal box ensure a connection of the screen and the motor housing. ● If the mains cable between mains filter and controller is longer than 300mm: – Screen mains cables. – Connect the screen of the mains cable directly to the inverter and to the mains filter and connect it to the mounting plate with as large a surface as possible. ● Use of a brake chopper: – Connect the screen of the brake resistor cable directly to the mounting plate, at the brake chopper and the brake resistor with as large a surface as possible. – Connect the screen of the cable between controller and brake chopper directly to the mounting plate, at the inverter and the brake chopper with a surface as large as possible. ● Screen the control cables: – Connect both screen ends of the digital control cables. – Connect one screen end of the analog control cables. – Always connect the screens to the screen connection at the controller over the shortest possible distance. ● Application of controllers in residential areas: – To limit the radio interference, use an additional screen damping ≥ 10 dB. This is usually achieved by installation in enclosed and grounded control cabinets made of metal.
Grounding	● Ground all metallically conductive components (controller, mains filter, motor filter, mains choke) using suitable cables connected to a central point (PE bar). ● Maintain the minimum cross-sections prescribed in the safety regulations: – For EMC, not the cable cross-section is important, but the surface and the contact with a cross-section as large as possible, i.e. large surface.

Installation

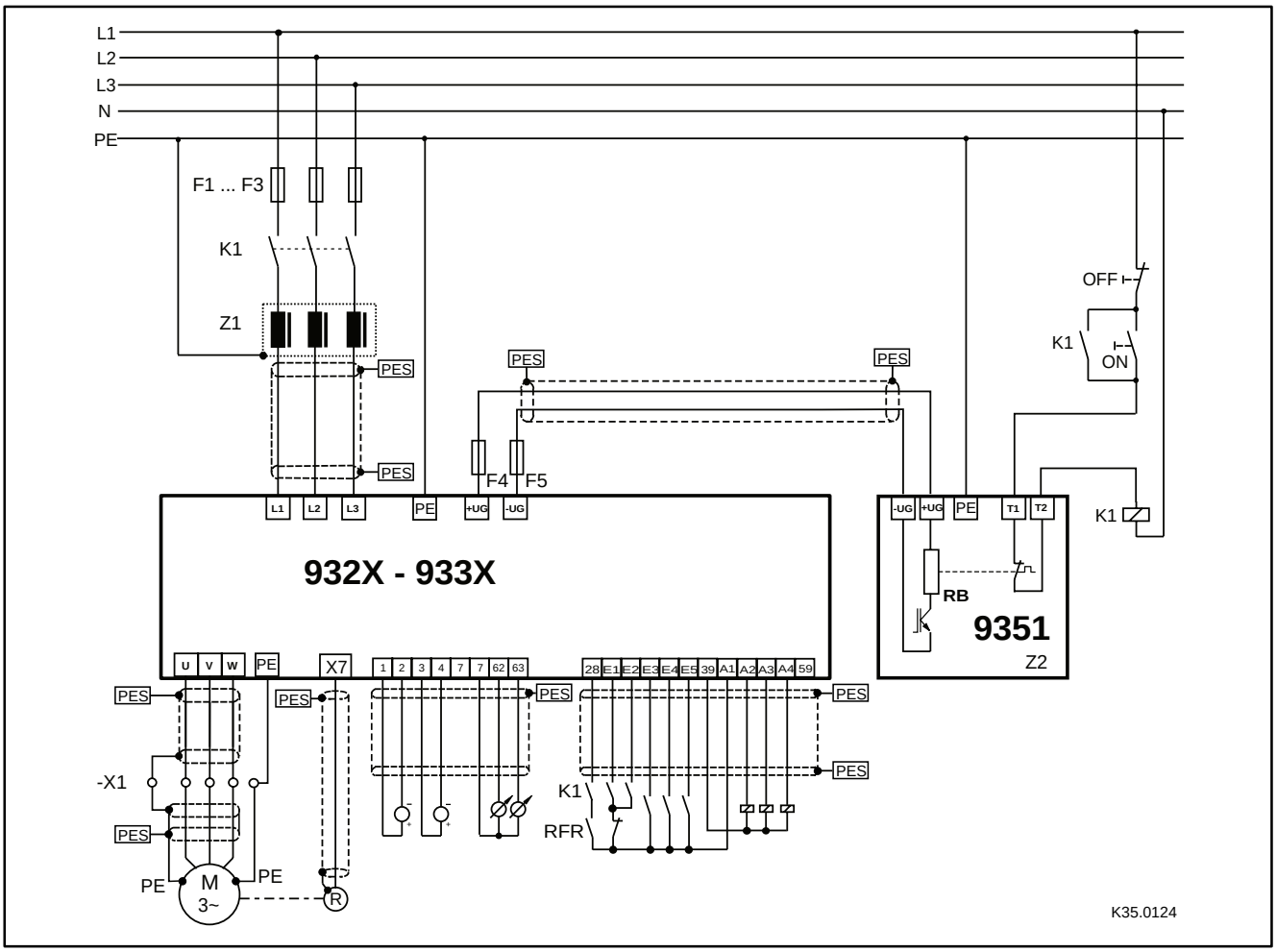

Fig. 4-17 Example for wiring in accordance with the EMC regulations

F1...F5	Protection, see “Cable protection” (📖 3-5) / “mains connection” (📖 4-13)
K1	Mains contactor
Z1	Mains filter “A” or “B” see Accessories.
Z2	Brake module, see Accessories.
-X1	Terminal strip in control cabinet
PES	RF scree termination by a PE connection with a surface as large as possible (see ”Screening” in this chapter).

Show/Hide Bookmarks

EDS9300-RC
00412731

Lenze

Manual
Part C

Commissioning

During operation

Global Drive

Servo register controller 9300

This documentation is valid for the servo register controllers 9300 as of version:

33.932X	ER	2G	1x	(9321 - 9329)
33.933X	ER	2G	1x	(9330 - 9332)
33.932X	CR	2G	1x	Cold Plate (9321 - 9328)

Type

Desgin:
E = Enclosure IP20
C = Cold Plate
xK = Cam profiler
xP = Position controller
xR = Register controller
xS = Servo inverter

Hardware level and index

Software level and index

Variant

Explanation

© 1999 Lenze GmbH & Co KG

Without written approval of Lenze Lenze GmbH & Co KG no part of these Instructions must be copied or given to third parties.

All indications given in these Operating instructions have been selected carefully and comply with the hardware and software described. Nevertheless, deviations cannot be ruled out. We do not take any responsibility or liability for damages which might possibly occur. Required corrections will be made in the following editions.

Version 1.0 12/99

Contents

Part C

5 Commissioning 5-1

5.1 Before switching on 5-1

5.2 Initial switch-on 5-1

5.3 Switch on the controller 5-4

5.4 Switch on PC, start GDC 5-5

5.5 General parameter set 5-7

5.5.1 Adapt controller to the mains 5-7

5.5.2 Adapt controller to the motor 5-8

5.5.3 Adapt controller to the plant 5-10

5.5.4 Set product parameters 5-10

5.5.5 Set-up machine (Start of the register evaluation) 5-11

5.5.6 Additional commissioning assistance 5-13

5.5.6.1 Selection of the direction of rotation for master encoder/motor 5-13

5.5.6.2 Format definitions 5-13

5.5.6.3 The register mark window 5-14

5.5.6.4 Phase positioning commands 5-15

5.5.6.5 Phase adjustment speed 5-16

5.5.6.6 Status/control word of the register controller 5-16

6 During operation 6-1

6.1 Status indications 6-1

6.1.1 On the 9371 BB keypad 6-1

6.1.2 In Global Drive Control 6-2

6.2 Information on operation 6-3

6.2.1 Switching on the motor side 6-3

6.2.2 Controller protection by current derating 6-4

Contents

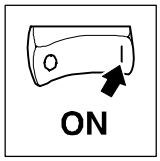

5 Commissioning

5.1 Before switching on

Prior to initial switch-on of the controller, check the wiring for completeness, short-circuit, and earth fault:

- Power connection:
  – Supply via terminals L1, L2 and L3 (direct mains connection) or alternatively via terminals +UG, -UG (DC bus connection, network of drives).
- Motor connection:
  – In-phase connection to the motor (direction of rotation).
- Feedback system (resolver, incremental encoder, □).
- Control terminals:
  – Controller enable: terminal X5/28 (reference potential: X5/39).
- Cover of the power terminals:
  – Put on cover(s) and fix.
- **Keep to the switch-on sequence!**
- All commissioning steps described in this chapter refer to the default setting.

5.2 Initial switch-on

Tip!

- Use a PC with the Lenze program ”Global Drive Control” (GDC) under Windows for commissioning. The convenient menu includes the codes for the most important settings.
- A fieldbus module type 2102 ”RS232, RS485, fibre optics” (Lecom A/B) is required to run the GDC.
- GDC and fieldbus module are not included in the scope of supply of the controller.

Commissioning using the example "Cross-cutter with cut register control"

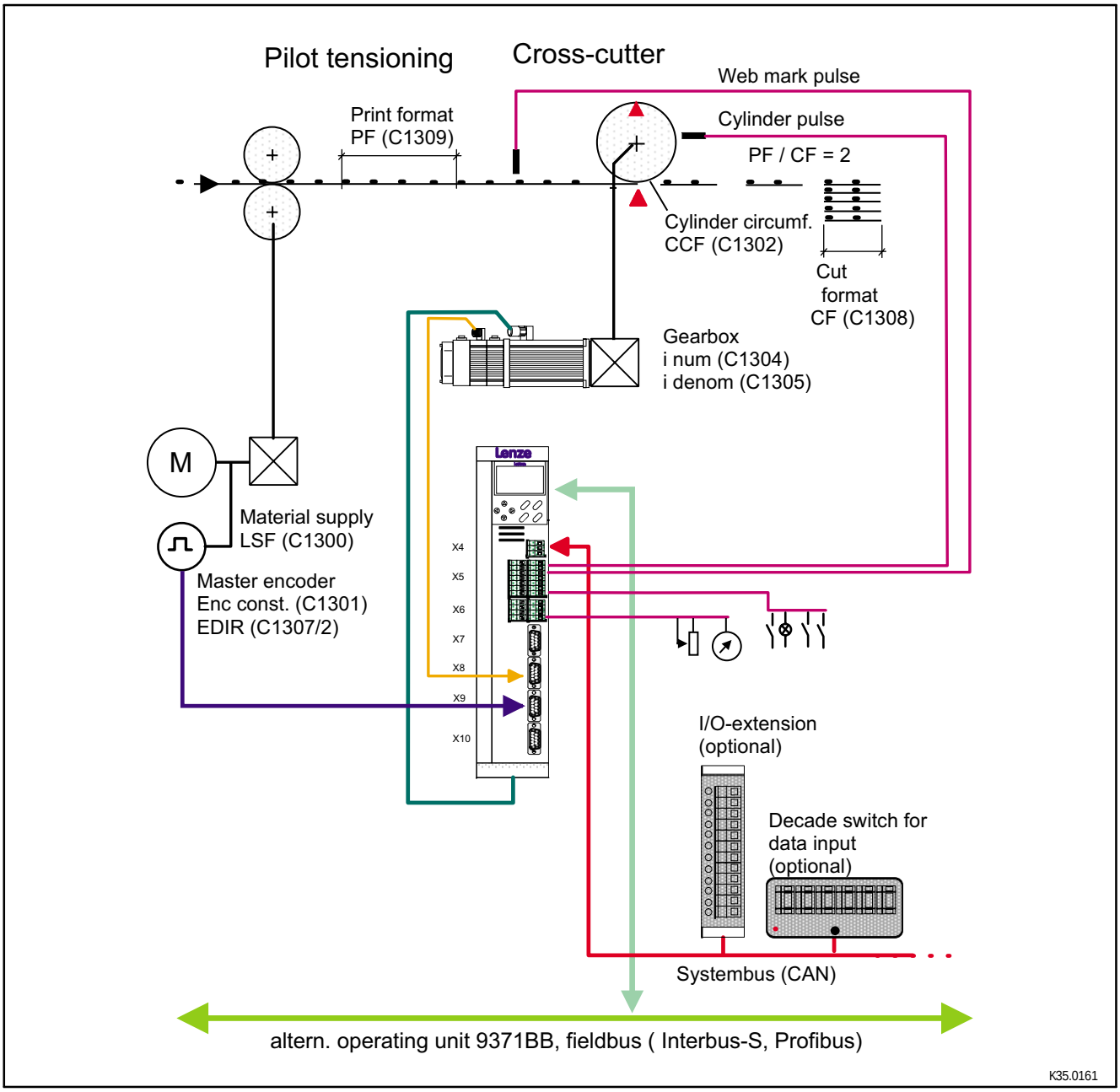

Fig. 5-1 Example of a register control

Principle of operation

The pilot tensioning unit feeds the web to the cross-cutter. Here, the material is split into sheets using a rotating asynchronous cutting procedure ("synchro system").

A contact switch detects the register marks on the material while a sensor detects the position on the cutting cylinder (1 pulse/rev.) as a digital 24V signal.

A master encoder (5V A/B differential signal) detects the line speed and the phase position of the previous machine.

For detailed information on the dimensioning of individual system components please refer to part K "Application examples". (📖 15-1)

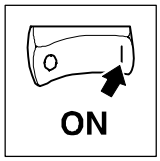

Tip!

The controller also allows the commissioning of the following applications:

- Speed control
- Torque control with speed limit
- Digital frequency master
- Digital frequency bus/digital frequency cascade slave

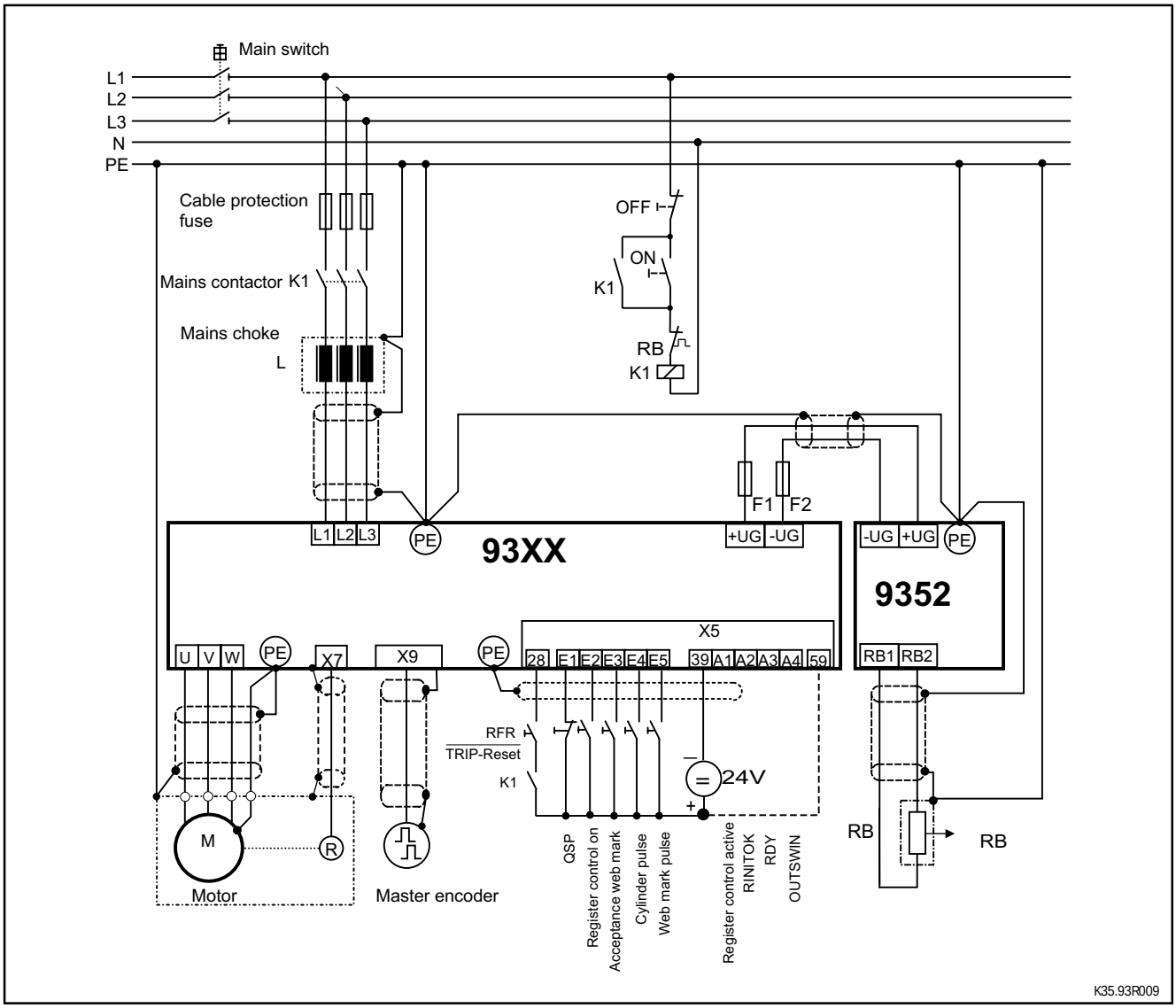

Fig. 5-2 Connection diagram for configuration 30000

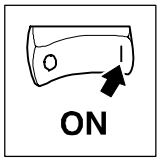

Commissioning

Tip!

A brake unit is required only if the DC bus voltage of the 93XX servo inverter in the generator mode exceeds the upper switch-off threshold set under C0173 (activation of the OU monitoring function). The brake unit avoids the activation of "OU" by converting the kinetic energy of the machine into heat and thus keeps the DC bus voltage below the upper switch-off threshold.

Overview

The following table lists the procedure for commissioning of a register control acording to the example in Fig. 5-1 or Fig. 5-2 .

A comprehensive description of the commissioning of register controls can be obtained from the following chapters.

Section	Action	Detailed description
Switch on controller	1. X5/28 (controller enable) must be open (LOW). 2. Switch on mains: – The controller is ready for operation after approx.0.5 s (2 s for drives with sin/cos encoders with serial interface).	📖 5-4
Switch on PC	Start the GDC program – Set the communication parameters for online operation in the "Momentary drive" dialog box. Confirm with "OK". – Select the controller in the "Assign controller description" dialog box. Confirm with "OK".	📖 5-5
Generate parameter set	1. Adapt controller to the mains. 2. Adapt controller to motor. 3. Adapt controller to the plant 4. Set product parameters	📖 5-7 📖 5-8 📖 5-10 📖 5-10
Setup machine for register control	1. Procedure for commissioning of the example 2. Other operating options	📖 5-11
Additional commissioning assistance		📖 5-13

5.3 Switch on the controller

1. Assign LOW level to terminal X5/28 (controller enable).
2. Switch on mains:
   – The controller is ready for operation after approx.1s (2 s for drives with sin/cos encoders with serial interface).
3. Check whether the controller is ready for operation:
   – If the green LED is flashing:
   Controller is ready for operation.
   – When green LED is off and red LED is blinking:
   There is a fault. Before proceeding with commissioning, eliminate the fault. (📖 8-1)
4. For operation with a fieldbus module, additional settings are necessary (see Operating Instructions for the fieldbus module used).

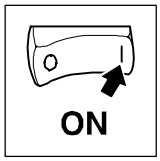

5.4 Switch on PC, start GDC

- Switch on PC.
- Start the GDC program under Windows.

When GDC is in ”online operation”

- The ”Find LECOM A/B drives” dialog box is opened.
- Click on ”Find”. GDC will now search for a controller.
- GDC selects the first controller found.
- GDC tests all baud rates which can be set.
- GDC loads the parameter set description for the connected controller.
  – If GDC does not find a parameter set description, you are asked which description you want to load alternatively.
- GDC automatically reads the parameter set from the controller.

When GDC is in ”offline operation”

- You have to select the controller manually.
  – You can change to ”online operation”. GDC automatically selects a controller.
- Click on ”Select” in the menu bar of the ”Controller” menu.
- In the dialog box ”Assign controller description”, select ”9300 servo inverter, register control” from the list box by a doubleclick.

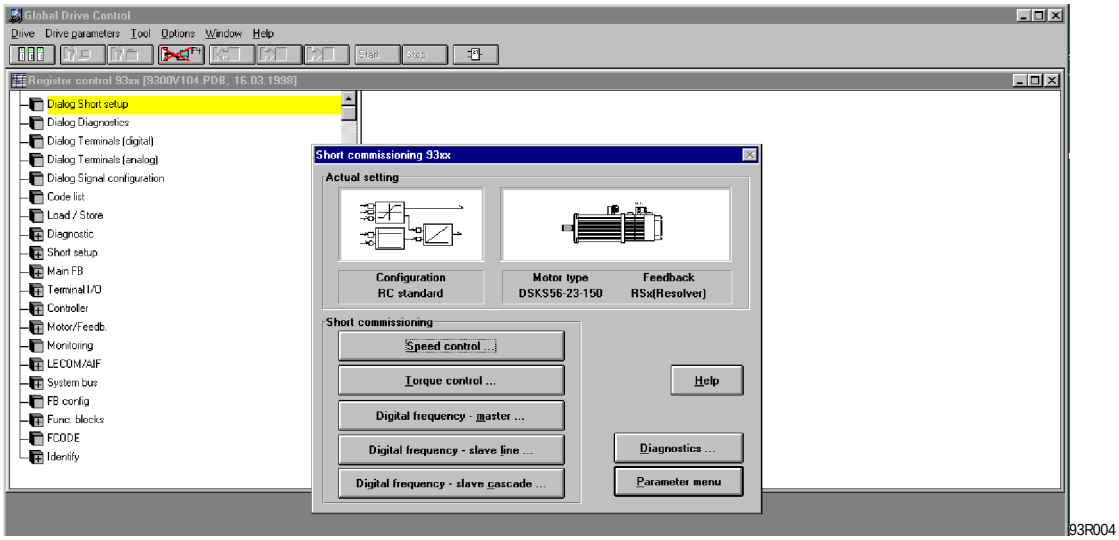

Fig. 5-3 Dialog box ”Short commissioning”

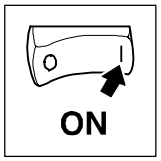

Commissioning

- The user interface contains the button "Parameter menu". You access the parameterization level of the controller by clicking on this button.
- The directories of the parameterization level include graphics. Some of the graphic symbols contain a "+" or a "-". If you click on the symbols, the lower-level directory opens or closes. For the commissioning of a register control please select the following path:
  – Short commissioning □
  – Register control (double-click)

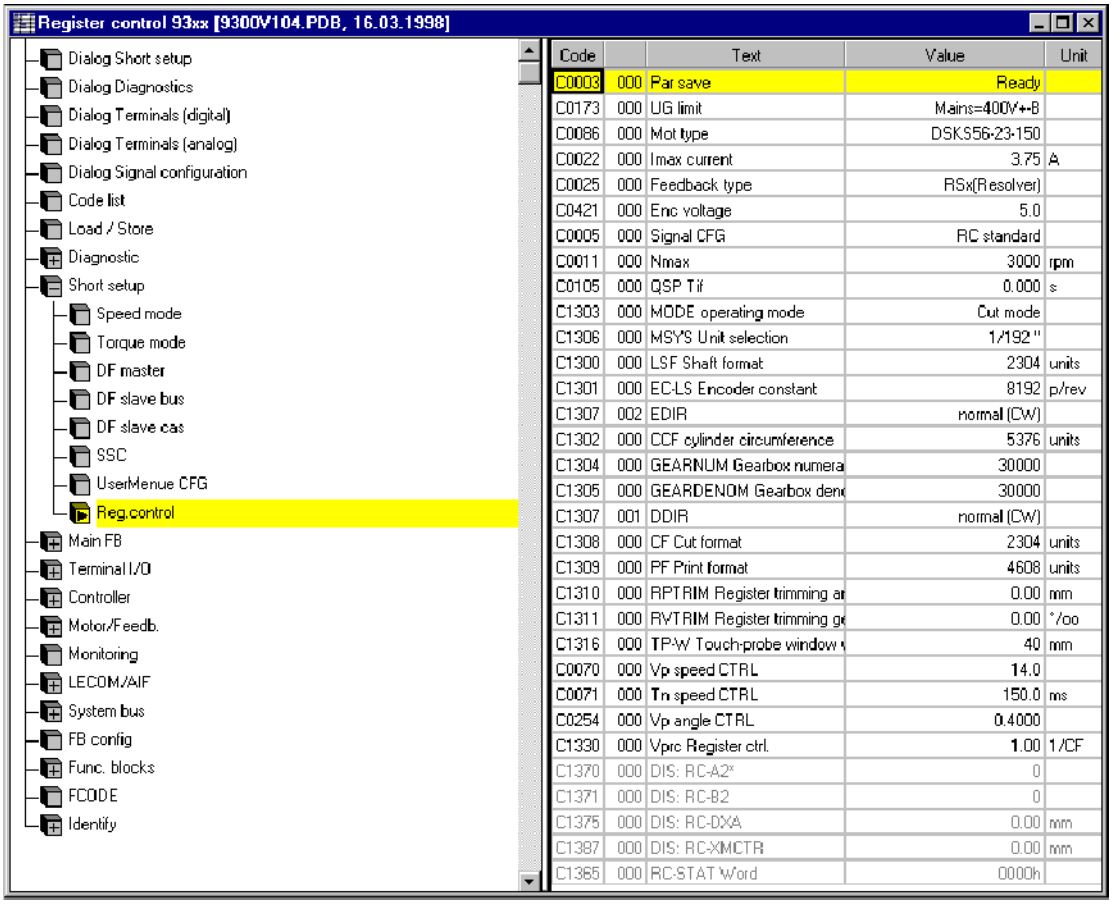

Fig. 5-4 Code list for the commissioning of a register control

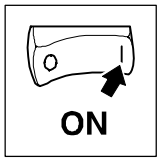

5.5 General parameter set

Warning!

Do not change any controller settings not mentioned in this chapter.

The instructions for the generation of a parameter set in this Chapter are based on the factory setting.

Proceed systematically when generating a parameter set:

1. Adapt controller to mains conditions.
2. Adapt controller to motor.
3. Enter machine parameters.

5.5.1 Adapt controller to the mains

- Adapt controller to the operating conditions under C0173:
  – If the controllers are not adapted, their lives are reduced.

C0173	Mains voltage	upper switch-off threshold	Operation
0	< 400 V	770 V	with or without brake unit
1 (factory setting)	400 V		
2	400 V < $U_{Mains} \leq$ 460 V		
3	480 V		**without** brake unit
4	480 V	800 V	**with** brake unit

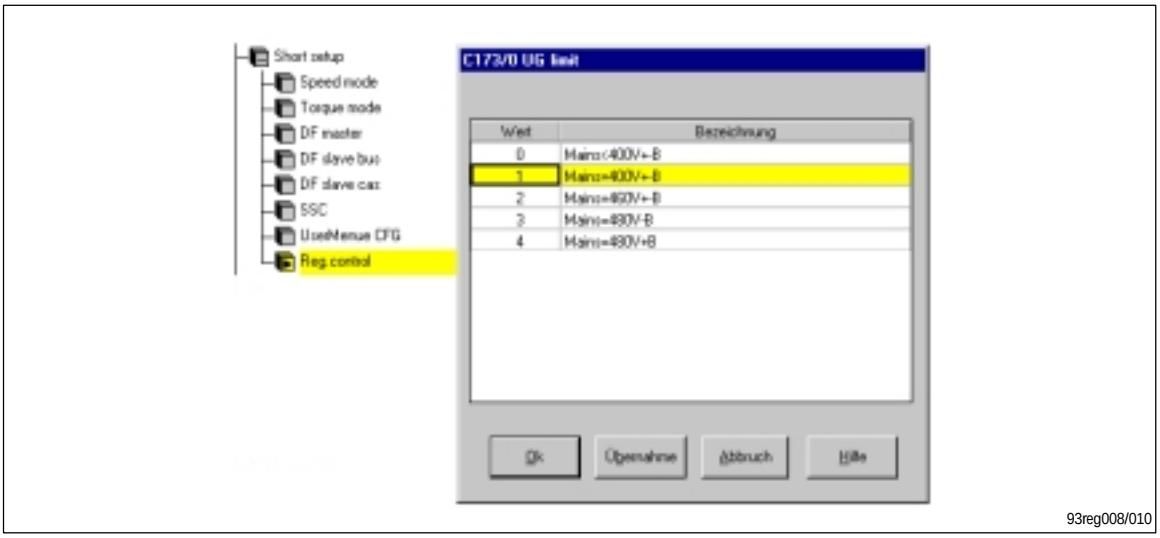

Fig. 5-5 Adaptation to the operating conditions

5.5.2 Adapt controller to the motor

This commissioning step forms the basis for the subsequent setting of an optimal speed-torque behaviour.

When you use a Lenze motor:

- “Selection motor type” under C0086

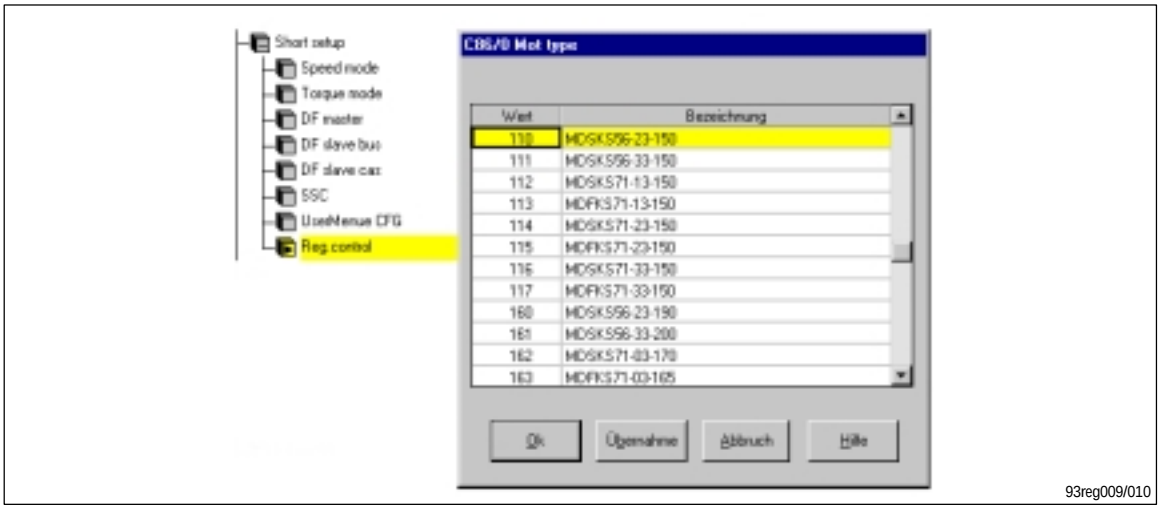

Fig. 5-6 “Selection motor type” (window)

- Selection “Feedback system” under C0025

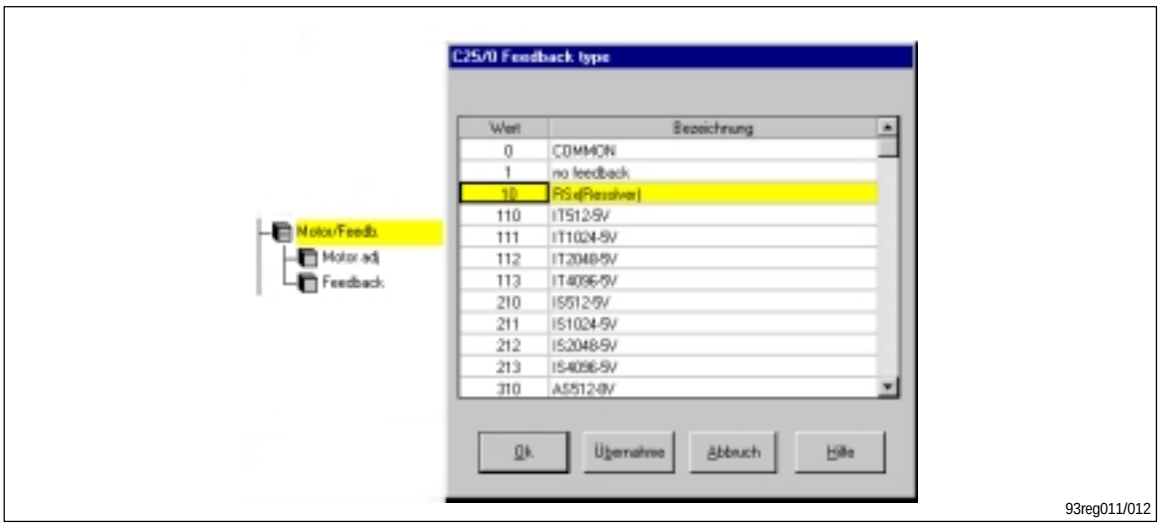

Fig. 5-7 “Selection feedback system” (window)

Command	Function
Select C0421	For feedback system AS 512 / AM512: Set 8V encoder supply
Select C0003	Save data (C0003 = 1).

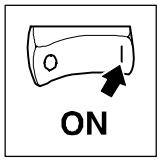

If you use a motor other than from Lenze:

- Parameter setting via "Motor/feedback system"
  – Motor adjustment

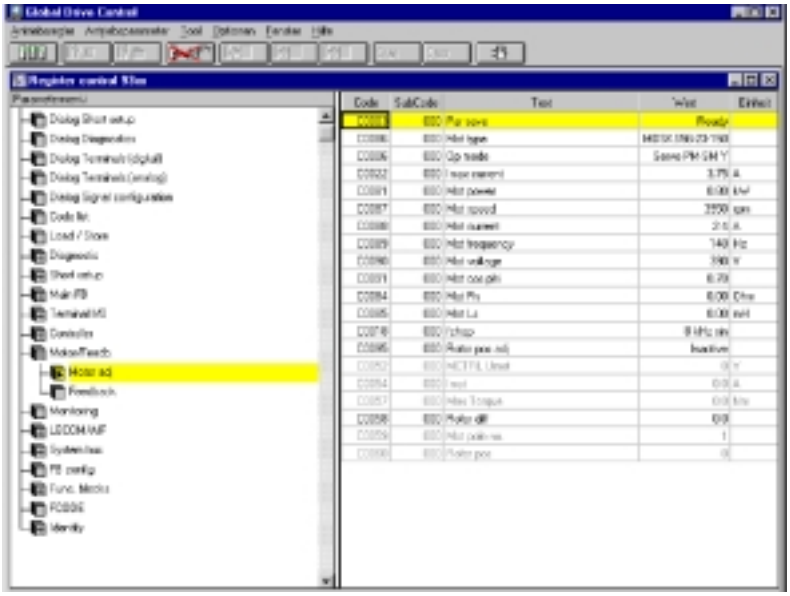

93reg013

Fig. 5-8 Parameter menu "Motor adjustment"

Command	Function
Select C0086	Select a motor which best matches the motor used. List of the motors available: 📖 7-243 .
Select C0006	Operating mode of the motor control
Select C0022	Adapt I_{max} to the maximum motor current.
Select C0081	Rated motor power
Select C0084	Stator resistance of the motor (only for very high demands on the control characteristics).
Select C0085	Stray inductance of the motor (only for very high demands on the control characteristics).
Select C0087	Rated motor speed
Select C0088	Rated motor current
Select C0089	Rated motor frequency
Select C0090	Rated motor voltage
Select C0091	Motor-cos φ.
Select C0003	Save data (C0003 = 1).

5.5.3 Adapt controller to the plant

For the adaptation of the controller to the plant, please proceed according to the sequence in the following list.

Enter controller configuration		
C0005	30000	Select register control
C0025	xxx	Enter feedback system
C0421	x.x V	Enter supply voltage of the feedback system. Under C0025, set 8V for the selection of the sine-cosine encoder AS/AM512.
Plant-specific settings		
C0011	xxxxx rpm	Determine max. speed
C0105	xxx.xxx s	Set QSP deceleration time
C1303	1	Set cross-cutting mode
C1306	x	Set measuring system (units)
C1300	xxxxx units	Set shaft format
C1307/2	x	Set direction of the master encoder
C1302	xxxxx units	Set circumference of the cutting cylinder
C1304	xxxx	Mech. gearbox ratio $n_{motor}/n_{cylinder}$ Set numerator
C1305	xxxxx	Mech. gearbox ratio $n_{motor}/n_{cylinder}$ Set denominator
C1307/1	x	Set direction of rotation for the motor
C0070	xxx.x	V_p n-controller
C0071	xxx.x	T_n n-controller
C0254	x.xxxx	V_p Phase controller
C1330	xx.xx	T_{prc} Register Control

Tip!

You should use the range of the codes Gear-num (C1304) and Gear-denom (C1305) to achieve optimum internal accuracies.

Example: A gear ratio of 3 is to be entered.

Input:

- Gear-num (C1304) = 30000
- Gear-denom (C1305) = 10000

Note:

1 unit is determined using MSYS (C1306).

1 unit = 0.1 mm and 1 unit = 1/192” are possible.

The unit 1/192” ensures the exact input of fractions (e. g. 11 2/3” = 2240 units).

5.5.4 Set product parameters

Please enter here your product parameters.
For additional information please refer to chapter “Commissioning assistance. (📖 5-13)

Product parameters		
C1308	xxxxx units	Cutting format (CF)
C1309	xxxxx units	Print format (PF)
C1310	xxxxx units	Register trimming
C0003	xxx	Save all parameters

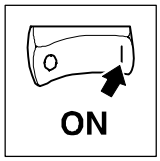

5.5.5 Set-up machine (Start of the register evaluation)

The register evaluation is initialized together with the machine set-up.

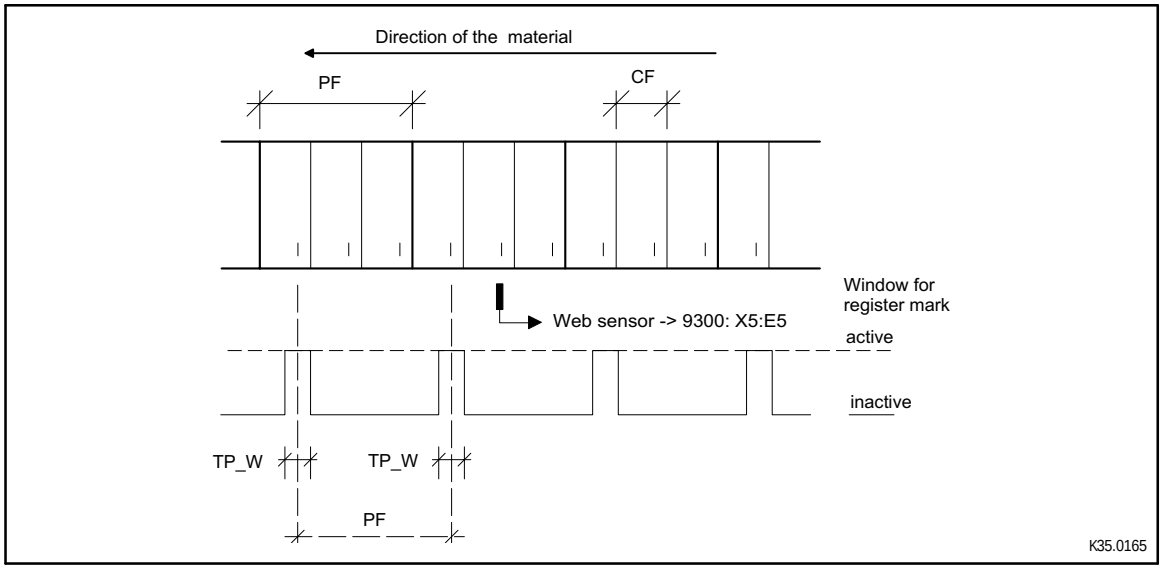

Fig. 5-9 Format definitions for register control

Please maintain the following sequence:

1. **Positioning of the register mark**
   During the machine set-up, position the register mark approx. 10mm before the detection position of the contact switch (observe the web direction).
2. **Activate acceptance of register mark**
   The 9300 register control can accept a register mark in two ways:
   – L/H edge at digital input E3 (see Fig. 5-2)
   Condition:C1345 Bit 5 = 0
   – Enter 0/1 signal in C1345/bit 5 (CR-RINIT).
   Condition: E3 = L
3. **Start machine**
4. **Generation of mark window** (automatically)
   The creation of a mark window is initialized when the first register mark is detected (L/H edge at E5). The mark window with the width TP_W is established symmetrically (±1/2 TP_W) around the register mark.
   The period of the mark window is 1 PF (see Fig. 5-9).
5. **Completion of the initialization**
   The initialization is completed with the following cylinder marks, defined by an L/H edge at E4. This is indicated:
   – H signal at A2
   – 1-level in C1345 bit 4 (SR-RINITOK)

The detected position of the register mark relative to the cylinder mark is saved as a zero register value and displayed in X0-OFFS (DIS;C1384). It is the zero register value.

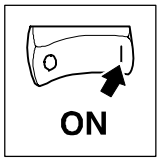

Commissioning

6. **Activation of the register control**
   The register control can be activated in two ways:
   – H-signal at the digital input E2
     Condition: C1345 Bit 1 = 0
   – Enter 1-signal in C1345 bit 1 (CR-CON). Condition: E2=L

The register is kept on the zero register.

- The status of the register controller is signalled:
  – Register controller on: A1 = H
  – Register controller off: A1 = L

Note:

The following conditions must be fulfilled before the register controller can be activated:

1. current line speed > V-LIM (C1318)
2. current register difference < COFF-LIM (C1326)

Other operating options

- Register trimming
  The register can be trimmed any time (even when the register control is switched off) using RPTRIM (C1310). The control can be added easily by adapting the zero register. The adjustment distance is provided as a relative variable with sign.The register is adjusted when the code is written.
- Register adjustment
  When the register control is switched on, the register can be adjusted using RSV (C1314). The adjustment distance is provided as a relative variable with sign. The register is adjusted when the code is written. The adjustment distance which can be achieved is ±0.5 * CF.

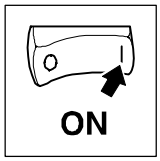

5.5.6 Additional commissioning assistance

5.5.6.1 Selection of the direction of rotation for master encoder/motor

Selection of the encoder's direction of rotation	Selection of the motor's direction of rotation	EDIR (C1307/2)	DDIR (C1307/1)
CW	CW	0	0
CW	CCW	0	1
CCW	CW	1	0
CCW	CCW	1	1

CW	Clockwise rotation when looking at the shaft
CCW	Counterclockwise rotation when looking at the shaft

5.5.6.2 Format definitions

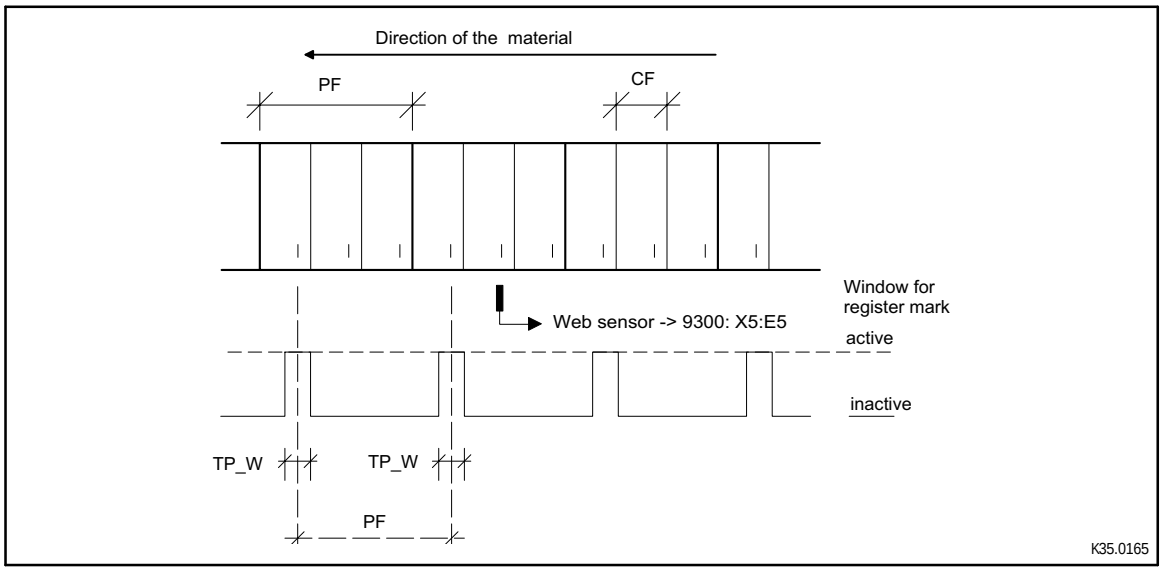

Fig. 5-10 Format definitions

Code	LCD	Note
C1308	PF	Print format of the print module of the printing machine
C1309	CF	Cutting format of the cross-cutter
C1300	Shaft format	Shaft format / Material supply of the machine per revolution of the master encoder
C1316	TP-window	Window width for active register mark detection

Conditions for the 9300 servo register controller:

1. $PF = n_F * CF$
   with $n_F = 1,2,3,4,....$ (integer numbers)
   n_F sheets per print format can be cut.
2. One mark per print format is evaluated.

5.5.6.3 The register mark window

The width and position of the mark window can be set.

1. The window width is entered in TP-W (C1316)
2. The mark window is centered around the mark when the register evaluation is started. A relative shift of the window position can be carried out as follows:
   – Input of an offset value in W-OFS (C1317). It is entered when the code is written.
   – Configure function block input RC-WOFS to a ”free code”. Enter offset value in the ”free code”. The shift is activated after a 0/1 edge at RC-WSET. This can be done several times.

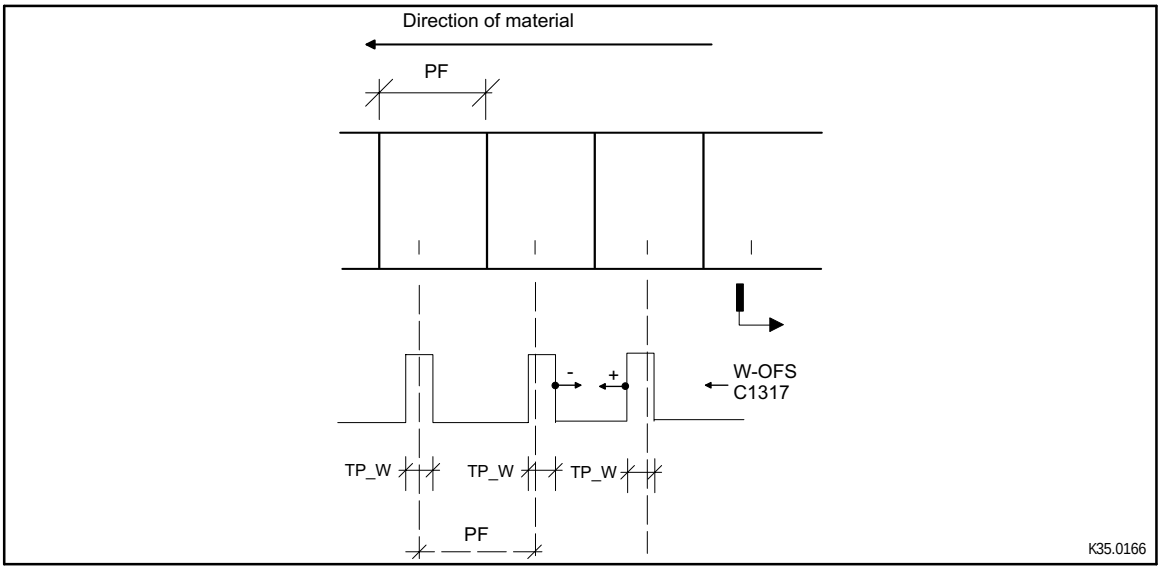

Fig. 5-11 Register mark window

Tip!

You can activate an automatic window offset. For this, you must set the following codes.

Code	Meaning	Unit	Setting*
C0473/4	Condition for the execution of the control commands: Distance register mark - window centre > value C0473/4 Execution: 1 control command per mark	1/100 mm	500
C0473/5	Control command for window offset in negative direction	1/100 mm	-100
C0473/6	Command for window offset in positive direction	1/100 mm	+100
* The values in the settings column are approximate values for a window width TP_W (C1316) > 20mm.			

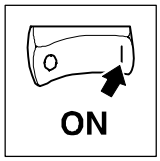

5.5.6.4 Phase positioning commands

The register trimming using RPTRIM as well as the compensation of register deviations can be achieved by a phase adjustment of the motor shaft, i.e. the phase relationship between motor shaft and master encoder shaft is changed.

The direction of rotation and the sign can be obtained from the following table.

In case of register setpoint input RSV (C1314), register trimming RPTRIM (C1310)

Input	Motor adjustment
+	in the motor's direction of rotation
-	opposite to the direction of motor rotation

In case of register difference

Fig.	Register difference DXA DIS: C1375	Actual register value XRACT DIS: C1374	Motor adjustment
1	+	-	in the motor's direction of rotation
2	-	+	opposite to the direction of motor rotation

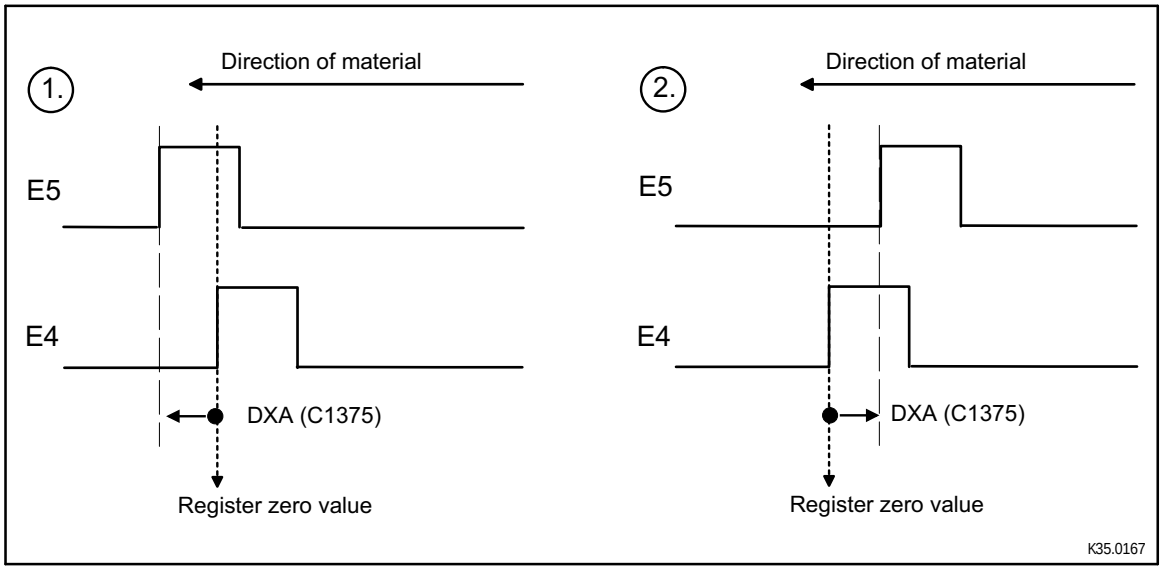

Fig. 5-12 Phase positioning commands

E4	Cylinder pulse (CM)
E5	Register mark identification pulse (PM)

5.5.6.5 Phase adjustment speed

The following modes are possible:

1. FB input RC-CMODE = 0 (default setting)
   The phase adjustment DPHI is related to the material distance of 1 CF (cut format). The size results from the register variable DXA, the gain Vprc (proportional gain) and CCY (adapting control characteristic). The unit of the phase adjustment is mm/CF.
2. FB input RC-CMODE = 1
   The phase adjustment DPHI is time-based. The unit of the phase adjustment is mm/s.

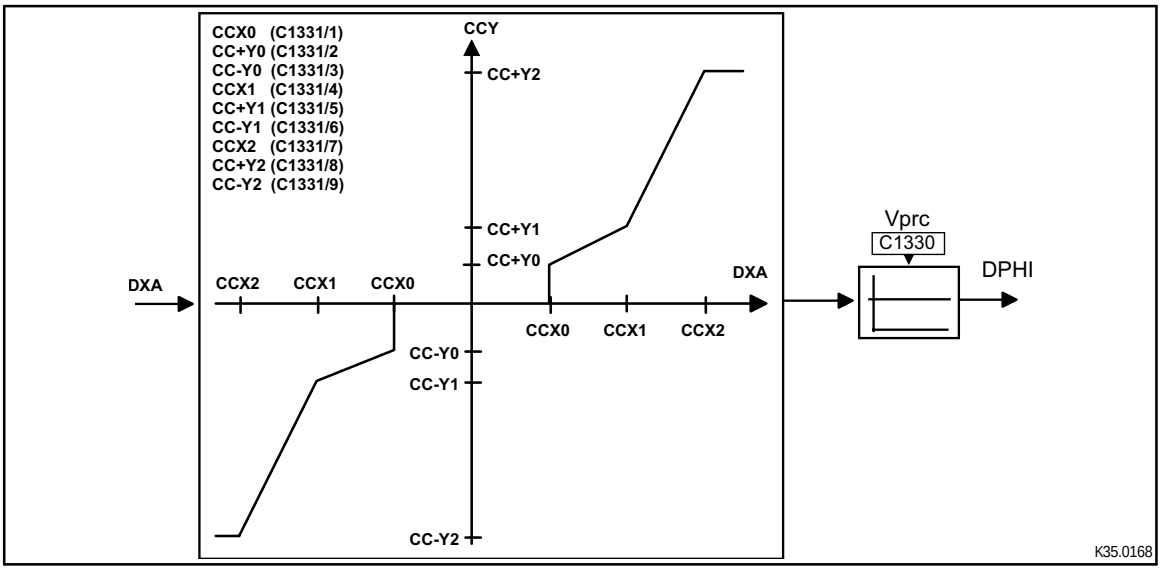

Fig. 5-13 Phase adjustment speed

5.5.6.6 Status/control word of the register controller

1. With the control / status word, the register control function can be performed using LECOM A/B and the parameter channels of Interbus-S, Profibus or system bus.
2. After switching on the servo controller, the control word is initialized with 00h.
3. Control word (C135) and status word (C150) of the controller are not affected.

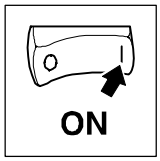

Control word of the register control RC-CTRL, C1345

Bit	Name	OR link with FB input	Status	Function
0	CR-LR	RC-LRSET	0 -> 1 0	Set start of coarse register Stop (cancel) set coarse register
1	CR-CON	RC-CON	1 0	Register control on Register control off
2	CR-GCON	RC-GCON	0 1	Gear control Off On
3	CR-CMODE	RC-CMODE	0 1	Register control mode: CF-based time-based
4	Free			
5	CR-RINIT	RC-RINIT	0 -> 1	Acceptance of mark (Center window around the mark)
6	Free		0	
7	CR-DXAEXT	RC-DXAEXT	0 1	Input of register difference DXA internal external
8	Free			
:				
15	Free			

Status word register conrol RC-STAT, C1365

Bit	Name	OR link	Status	Function
0	SR-LROK	RC-LROK	1	State: First coarse register completed and second CR-LR = 0
1	SR-CSTAT	RC-CSTAT	1 0	Register control is on Register control is off
2	SR-GCSTAT	RC-GCSTAT	0 1	Gear control is off Gear control is on
3	SR-CMSTAT	RC-CMSTAT	0 1	Current register control mode: CF-based time-based
4	SR-RINITOK	RC-RINITOK	0 1	Acceptance of mark not carried out carried out and CR-RINIT = 0
5	SR-OUTSWIN	RC-OUTSWIN	0 1	mark within window mark outside window
6	SR-FPM	RC-FPM	0 1	mark pulse OK Error mark pulse (fault paper mark)
7	SR-FCM	RC-FCM	0 1	Cylinder pulse OK Error cylinder pulse (fault cylinder mark)
8	SR-RSGN	RC-RSGN	0 1	Sign of the register difference pos. neg.
9	SR-X0LIM	RC-X0LIM	1	|Register difference| > CCX0 (C1331/1)
10	SR-X1LIM	RC-X1LIM	1	|Register difference| > CCX1 (C1331/4)
11	SR-COFFLIM	RC-COFFLIM	1	|Register difference| > C-OFFLIM (C1326)
12	SR-MLIM1	RC-MLIM1	1	|Register difference| > M-LIM1 (C1327)
13	SR-VLIM	RC-VLIM	1	Line speed >= V-LIM for register control on reached
14	SR-TRIMOK	RC-TRIMOK	0 1	State of the phase/web length trimming (C1310, C1311) active completed
15	Free			

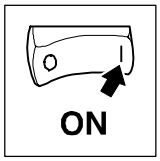

Commissioning

6 During operation

6.1 Status indications

6.1.1 On the 9371 BB keypad

Status messages on the keypad		
Display	**on**	**off**
RDY	Ready for operation	Initializing or fault
IMP	Power outputs inhibited	Power outputs enabled
FAIL	Active fault (TRIP, fail-QSP, message or warning)	No fault
I_{MAX}	Motor current setpoint ≥ C0022	Motor current setpoint < C0022
M_{MAX}	Speed controller within its limitation. Drive is torque controlled.	Speed-controlled drive

6.1.2 In Global Drive Control

1. Click the "Control" button in the "Basic settings" dialog box.
2. Click the "Diagnostic" button in the "Control" dialog box.

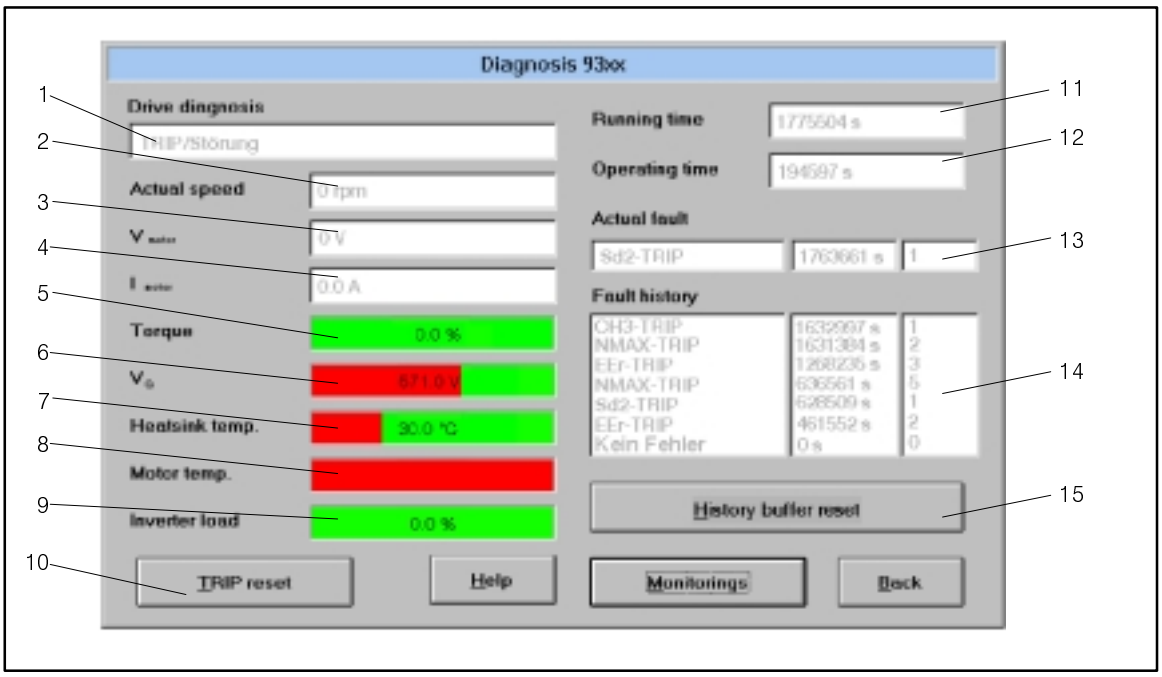

Fig. 6-1 Dialog box "Diagnostics 9300"

1	Type of fault
2	Actual speed
3	Actual motor voltage
4	Actual motor current
5	Motor torque
6	DC-bus voltage
7	Heat sink temperature
8	Motor temperature
9	Controller load
10	Reset fault
11	Time when the supply voltage was applied
12	Time when the controller was enabled
13	Actual fault with time and frequency of the fault. 🕮 8-3
14	Fault history with time and frequency of the fault. 🕮 8-3
15	Reset history buffer. 🕮 8-4

6.2 Information on operation

Please observe the following notes for controller operation:

Stop!

- Cyclic connection and disconnection of the supply voltage at L1, L2, L3 or $+U_{DC}$, $-U_G$ mgiht overload the internal input current limit:
  – Allow at least 3 minutes between disconnection and reconnection.

- During mains switching (L1,L2,L3) it is not important whether further controllers are supplied via the DC bus.

6.2.1 Switching on the motor side

- Switching on the motor side of the inverter is permissible for emergency switch-off.
- Please note:
  – Switching while a controller is enabled may cause the fault indication ”0Cx” (short-circuit/earth fault in operating case x).
  – For long motor cables and operation of controllers with smaller output power, leakage currents through interfering cable capacitances may cause the fault indication ”OCx”.
  – Switching equipment on the motor side must be dimensioned for DC voltages (V_{DC} max = 800 V).

6.2.2 Controller protection by current derating

Valid for the types 9326 to 9332.

For field frequencies < 5 Hz the controller automatically derates the maximum permissible output current.

- For operation with chopping frequency = 8 KHz (C0018=1, optimum power):
  – The current limit is derated according to the heat sink temperature (see Fig. 6-2).
- For operation with chopping frequency = 16 KHz (C0018=2, optimum noise):
  – The current limit is always derated to $I_{r16} = I_{016}$.
- For operation with automatic changeover of the chopping frequency (C0018=0):
  – Below the threshold, the controller operates with 16 kHz (optimum noise). The function of the current limitation follows the characteristic ”Imax 16 KHz” (see Fig. 6-2).
  – If the machine requires a higher torque, for example for acceleration, the controller automatically switches to 8 kHz (optimum power). The function of the current limitation follows the characteristic ”Imax 8 KHz” (see Fig. 6-2).

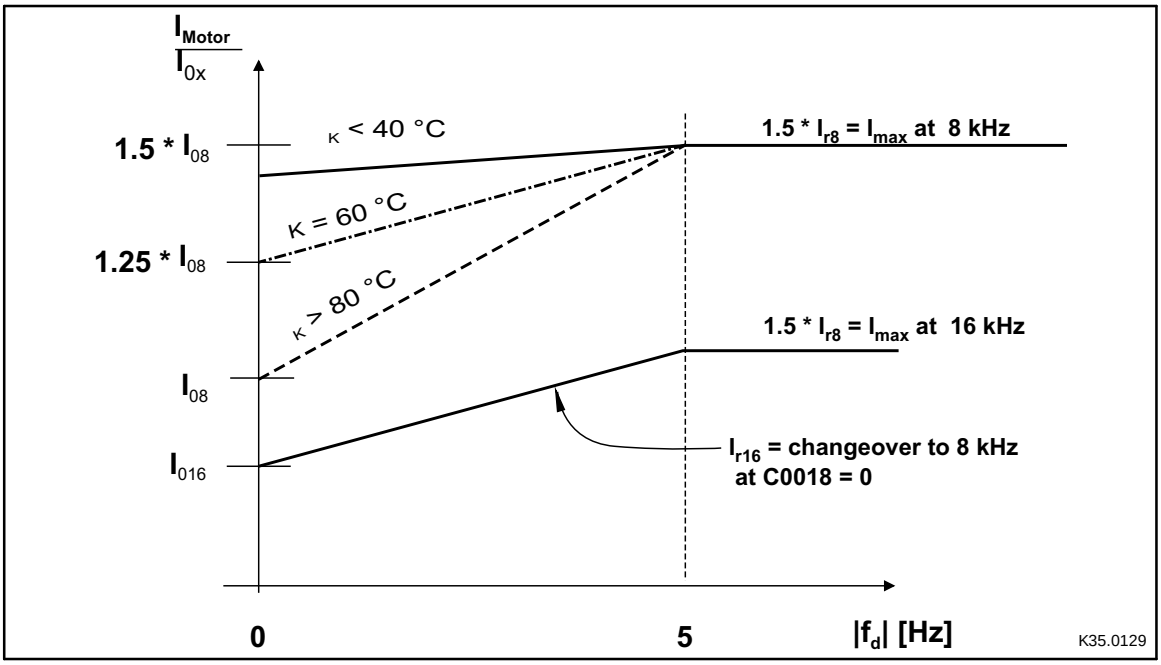

Fig. 6-2 Current derating function for types 9326 to 9332

ϑ_K	Heat sink temperature
I_{rx}	Rated current at U, V, W depends on the chopper frequency
f_d	Field frequency at output U, V, W
I_{0x}	Max. standstill current at field frequency = 0 Hz

See also chapter “Rated data”. 🕮 3-3

Show/Hide Bookmarks

EDS9300-RD4.1
00412732

Lenze

Manual
Part D4.1

Configuration

Global Drive

Servo register controller 9300

This documentation is valid for the servo register controllers 9300 as of version:

33.932X	ER	2G	1x	(9321 - 9329)
33.933X	ER	2G	1x	(9330 - 9332)
33.932X	CR	2G	1x	Cold Plate (9321 - 9328)

Type

Desgin:
E = Enclosure IP20
C = Cold Plate
xK = Cam profiler
xP = Position controller
xR = Register controller
xS = Servo inverter

Hardware level and index

Software level and index

Variant

Explanation

© 1999 Lenze GmbH & Co KG

Without written approval of Lenze Lenze GmbH & Co KG no part of these Instructions must be copied or given to third parties.

All indications given in these Operating instructions have been selected carefully and comply with the hardware and software described. Nevertheless, deviations cannot be ruled out. We do not take any responsibility or liability for damages which might possibly occur. Required corrections will be made in the following editions.

Version 1.0 12/99

Contents

Part D4.1

7 Configuration 7-1

7.1 Predefined configurations 7-1
7.1.1 Working with predefined configurations 7-1
7.2 Operating modes 7-2
7.2.1 Parameter setting 7-2
7.2.2 Control 7-2
7.2.3 Configuration with Global Drive Control 7-2
7.3 Working with function blocks 7-4
7.3.1 Signal types 7-4
7.3.2 Elements of a function block 7-5
7.3.3 Connection of function blocks 7-6
7.3.4 Entries into the processing table 7-10
7.3.4.1 Signal configuration with Global-Drive-Control 7-12
7.4 Terminal assignment 7-13
7.4.1 Freely assignable digital inputs 7-13
7.4.2 Freely assignable digital outputs 7-14
7.4.3 Input and outputof the STATE-BUS 7-15
7.4.4 Freely assignable analog inputs 7-16
7.4.5 Freely assignable analog outputs 7-17
7.5 Introduction into register control 7-18
7.6 Description of function blocks 7-19
7.6.1 Register control (RC) 7-22
7.6.1.1 Phase ratio synchronizing 7-25
7.6.1.2 Plant data 7-27
7.6.1.3 Measuring system and format definitions 7-28
7.6.1.4 Selection of the direction of rotation master encoder/motor 7-28
7.6.1.5 Product parameters 7-29
7.6.1.6 Initialization of register control 7-30
7.6.1.7 Dead time compensation of the label detection channels 7-33
7.6.1.8 Label window 7-34
7.6.1.9 Setpoint register input and generation of manipulated value 7-36
7.6.1.10 Register trimming RPTRIM 7-39
7.6.1.11 Material length trimming RVTRIM 7-40
7.6.1.12 Gear control 7-41
7.6.1.13 Set coarse register 7-42
7.6.1.14 Phase trimming 7-43
7.6.1.15 Messages and monitoring 7-44
7.6.1.16 Control/status word of the register control 7-46
7.6.1.17 Display codes of function block RC 7-47
7.6.2 Absolute value generator (ABS) 7-49
7.6.3 Addition block (ADD) 7-50
7.6.4 Automation interface (AIF-IN) 7-51
7.6.5 Automation interface (AIF-OUT) 7-54
7.6.6 Analog input via terminal 1,2/3,4 (AIN) 7-56
7.6.7 AND link (AND) 7-58
7.6.8 Inverter (ANEG) 7-61
7.6.9 Analog output via terminal 62/63 (AOUT) 7-62
7.6.10 Arithmetic block (ARIT) 7-64

Contents

7.6.11 Arithmetic block (ARITPH) 7-67
7.6.12 Changeover switch for analog signals (ASW) 7-68
7.6.13 Holding brake (BRK) 7-69
7.6.13.1 Close brake 7-70
7.6.13.2 Open brake 7-70
7.6.13.3 Setting controller inhibit 7-71
7.6.14 System bus (CAN-IN) 7-73
7.6.15 System bus (CAN-OUT) 7-80
7.6.16 Comparator (CMP) 7-84
7.6.16.1 Function 1: CMP1-IN1 = CMP1-IN2 7-85
7.6.16.2 Function 2: CMP1-IN1 > CMP1-IN2 7-86
7.6.16.3 Function 3: CMP1-IN1 < CMP1-IN2 7-86
7.6.16.4 Function 4: |CMP1-IN1| = |CMP1-IN2| 7-87
7.6.16.5 Function 5: |CMP1-IN1| > |CMP1-IN2| 7-87
7.6.16.6 Function 6: |CMP1-IN1| < |CMP1-IN2| 7-87
7.6.17 Signal conversion (CONV) 7-88
7.6.18 Phase conversion (CONVPHA) 7-90
7.6.19 Characteristic function (CURVE) 7-91
7.6.19.1 Characteristic with two co-ordinates 7-92
7.6.19.2 Characteristic with three co-ordinates 7-92
7.6.19.3 Characteristic with four co-ordinates 7-93
7.6.20 Dead band (DB) 7-94
7.6.21 Control of the controller (DCTRL) 7-95
7.6.21.1 Quick stop (QSP) 7-96
7.6.21.2 Operation inhibited (DISABLE) 7-97
7.6.21.3 Controller inhibit (CINH) 7-97
7.6.21.4 TRIP-SET 7-97
7.6.21.5 TRIP-RESET 7-97
7.6.21.6 Change of parameter set (PAR) 7-98
7.6.21.7 Controller state 7-98
7.6.22 Digital frequency input (DFIN) 7-99
7.6.23 Digital frequency ramp generator (DFRFG) 7-102
7.6.23.1 Profile generator 7-102
7.6.23.2 Quick stop 7-103
7.6.23.3 Ramp generator stop 7-104
7.6.23.4 RESET 7-104
7.6.23.5 Detect phase difference 7-104
7.6.24 Digital frequency processing (DFSET) 7-105
7.6.24.1 Setpoint conditioning 7-106
7.6.24.2 Processing of correction values 7-106
7.6.24.3 Synchronization on zero track or touch probe 7-107
7.6.25 Digital frequency output (DFOUT) 7-108
7.6.25.1 Output signals on X10 7-109
7.6.25.2 Output of an analog signal 7-110
7.6.25.3 Output of a speed signal 7-110
7.6.25.4 Encoder simulation of the resolver 7-111
7.6.25.5 Direct output of X8 (C0540 = 4) 7-111
7.6.25.6 Direct output of X9 (C0540 = 5) 7-111
7.6.26 Delay elements (DIGDEL) 7-112
7.6.26.1 On-delay 7-113
7.6.26.2 Dropout delay 7-113
7.6.26.3 General delay 7-114
7.6.27 Freely assignable digital inputs (DIGIN) 7-115
7.6.28 Freely assignable digital outputs (DIGOUT) 7-116
7.6.29 First order derivative-action element (DT1) 7-117

Contents

7.6.30 Free piece counter (FCNT) 7-118
7.6.31 Free codes (FCODE) 7-119
7.6.31.1 FCODE strobe 7-119
7.6.32 Free digital outputs (FDO) 7-120
7.6.33 Freely assignable input variables (FEVAN) 7-122
7.6.34 Flipflop (FLIP) 7-127
7.6.35 Limiter (LIM) 7-129
7.6.36 Internal motor control (MCTRL) 7-130
7.6.36.1 Current controller 7-132
7.6.36.2 Additional torque setpoint 7-132
7.6.36.3 Torque limiting 7-132
7.6.36.4 Speed controller 7-133
7.6.36.5 Torque control with speed limit 7-133
7.6.36.6 Limiting of speed setpoint 7-134
7.6.36.7 Phase controller 7-134
7.6.36.8 Quick stop (QSP) 7-135
7.6.36.9 Field weakening 7-135
7.6.36.10 Chopping frequency change-over 7-136
7.6.37 Motor potentiometer (MPOT) 7-137
7.6.38 Logic NOT (NOT) 7-139
7.6.39 Conditioning of the setpoint speed (NSET) 7-141
7.6.39.1 Main setpoint channel 7-142
7.6.39.2 JOG setpoints 7-143
7.6.39.3 Setpoint inversion 7-144
7.6.39.4 S ramp 7-145
7.6.39.5 Arithmetic operation 7-145
7.6.39.6 Additional setpoint 7-145
7.6.40 OR operation (OR) 7-146
7.6.41 Process controller (PCTRL1) 7-149
7.6.41.1 Control characteristic 7-150
7.6.41.2 Ramp generator 7-151
7.6.41.3 Value range of the output signal 7-151
7.6.41.4 Evaluation of the output signal 7-151
7.6.41.5 Deactivation of the process controller 7-151
7.6.42 Phase comparator (PHCMP) 7-152
7.6.43 Signal adaptation for phase signals (PHDIV) 7-153
7.6.44 Phase integrator (PHINT) 7-154
7.6.44.1 Constant input value 7-155
7.6.44.2 Scaling of PHINTx-OUT 7-156
7.6.45 First order delay element (PT1) 7-157
7.6.46 CW-CCW-QSP link (R/L/Q) 7-158
7.6.47 Homing function (REF) 7-158
7.6.47.1 Profile generator 7-159
7.6.47.2 Homing modes 7-161
7.6.47.3 Control via input signals 7-163
7.6.47.4 Output of status signals 7-164
7.6.47.5 Connection of the function block 7-164
7.6.48 Ramp generator (RFG) 7-165
7.6.48.1 Calculation and setting of the times Tir and Tif 7-166
7.6.48.2 Loading of the ramp generator 7-166
7.6.49 Sample and hold function (S&H) 7-167
7.6.50 S-shaped ramp generator (SRFG) 7-168
7.6.51 Output of digital status signals (STAT) 7-170
7.6.52 Control of a drive network (STATE-BUS) 7-171

Contents

7.6.53 Edge evaluation (TRANS) 7-172
7.6.53.1 Evaluate positive edge 7-173
7.6.53.2 Evalute negative edge 7-173
7.6.53.3 Evaluate positive or negative edge 7-174

7.7 Parameter setting 7-175
7.7.1 Ways of parameterization 7-175
7.7.2 Change parameters 7-176
7.7.3 Parameter set transfer 7-177
7.7.3.1 Password protection 7-179

7.8 Monitoring 7-180
7.8.1 Reactions 7-180
7.8.2 Setting of reactions 7-181
7.8.3 Monitoring functions 7-182

7 Configuration

Every practical application demands certain application-specific configurations (programs).

For this, function blocks are available which can be connected for the corresponding application. The function blocks are linked via codes. (📖 7-4)

7.1 Predefined configurations

Basic configurations are already defined for standard applications of the controller. These basic configurations can be selected via code C0005. The signal flow charts for the most important basic configurations are listed in the appendix.

7.1.1 Working with predefined configurations

To adapt predefined configurations to your application, proceed as follows:

1. Select basic configuration under C0005.
2. Select operating mode under C0005. (📖 7-186)
3. Configure different signal flow charts, if necessary:
   – Integrate or remove function blocks. (📖 7-4)
   – Set parameters for function blocks. (📖 7-5)
   – Change terminal configuration.

Note!

If the signal flow for the basic configuration is changed, e.g. by adding function blocks, C0005 is set to ”0”. The message ”COMMON” is displayed.

If only the assignment of the control inputs and outputs is changed, C0005 remains the same. Under code C0464 an identification is displayed.

7.2 Operating modes

You determine, by the choice of operating mode, which interface you want to use for parameter setting or control of the controller.

7.2.1 Parameter setting

The parameters are set via

- a communication module (plugged at X1)
  – 2102 (LECOM A/B/LI)
  – 2111 (INTERBUS)
  – 2131 (PROFIBUS)
- the system bus module (plugged at X4)
  – 2173
- Basically, the parameters can be changed by both interfaces.

7.2.2 Control

The control is via terminals (X5 and X6), via the fieldbus module at X1 or via the system bus (X4). Mixed modes are also possible.

Tip!

C0005 contains predefined configurations which allow a very simple change of the operating mode.

7.2.3 Configuration with Global Drive Control

With the PC program Global Drive Control (GDC) LENZE offers

- an easy to understand,
- well structured,
- convenient

tool for the configuration of your specific drive task.

Function block library

- GDC provides an easy-to-read library of available function blocks (FB).
- GDC also displays the complete assignment of a FB.

Signal configuration

The signal configuration is done with only one dialog box. It is a convenient way

- to display every FB as a block diagram.
- to see the assignment of all signal inputs at a glance.
- to enter the FB in the processing table.
- to print your signal configuration.

Terminal assignment

Freely assignable terminals can be configured using two dialog boxes:

- Dialog box - to link digital inputs and outputs.
- Dialog box - to link analog inputs and outputs.

7.3 Working with function blocks

You can configure the signal flow in the controller yourself by connecting function blocks. The controller can thus be easily adapted to diverse applications.

7.3.1 Signal types

Every function block has a number of inputs and outputs for connection. Corresponding to their functions, there are only certain types of signals at the inputs and outputs:

- Quasi analog signals
  - Symbol: ○
  - Unit: %
  - Abbreviation: a
  - Value range: □ 16384 = □ 100%
  - Resolution: 16 bit
- Digital signals
  - Symbol: □
  - Unit: binary, with HIGH or LOW level
  - Abbreviation: d
  - Resolution: 1 bit
- Speed signals
  - Symbol: △
  - Unit: rpm
  - Abbreviation: phd
  - Resolution: 16 bit
- Phase signals
  - Symbol: ▲
  - Unit: inc
  - Abbreviation: ph
  - Resolution: 16 bit

Only the same types of signals can be connected. Thus, the analog output signal of one function block can only be connected to the analog input of the other function block. If you try to connect two different signal types, the connection is rejected.

7.3.2 Elements of a function block

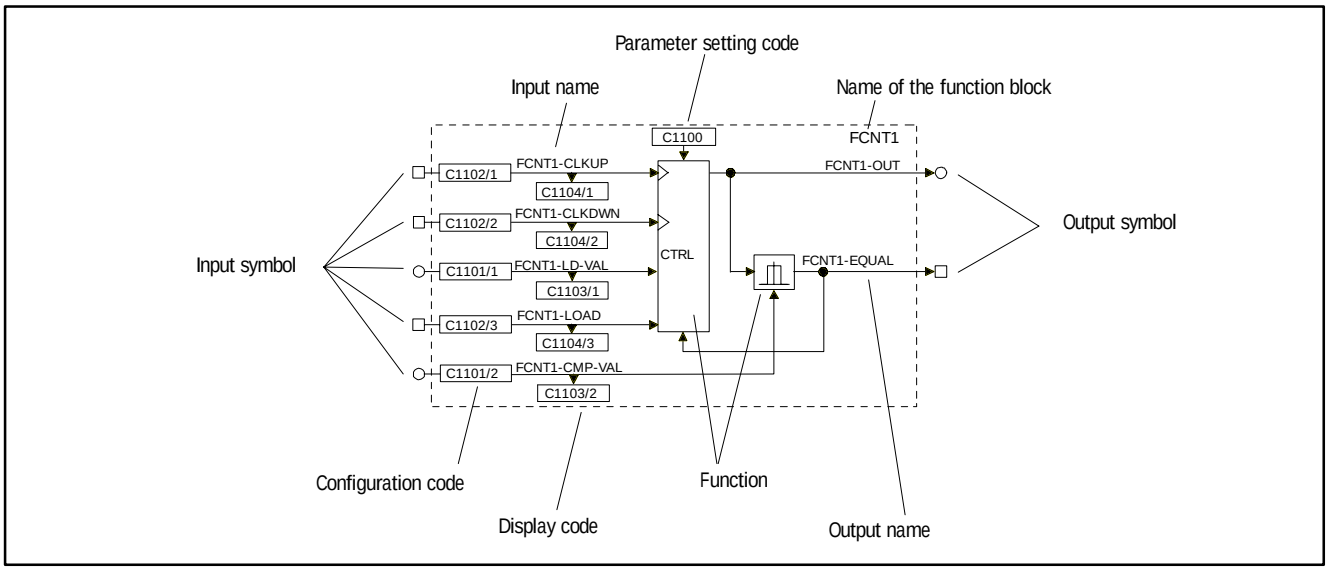

Fig. 7-1 Structure of a FB using the example of FCNT1

Name of the FB

Identifies the FB unambigeously. FBs with the same function are distinguished by a number behind their names.

Every FB is defined by a selection number. The input of the selection number into the processing table is always required for the calculation of the FB. (📖 7-10) . The selection numbers are listed in selection list 5. (📖7-225) .

Example:

(FCNT1, see Fig. 7-1)

- FCNT1 ≙ selection number 6400 (selection list 5).

Input symbol

Designates the signal type which is allowed as signal source for this input. (📖 7-4)

Note!

You cannot configure inputs which are not linked.

Input name

Consists of the FB name and a designation. Inputs with the same function are distinguished by a number behind their designations.

Configuration code

Configures the input with a signal source (e.g. terminal signal, control code, output of a FB, □). Inputs with identical codes are distinguished by the subcode. The subcode is attached to the code (Cxxxx/1). These codes are configured by their subcodes.

It is not possible to connect an input with several signal sources.

Display code

Displays the current input value. Inputs with identical codes are distinguished by the subcode. The subcode is attached to the code (Cxxxx/1). These codes are displayed via their subcodes.

Display codes cannot be processed.

Function

Represents the mathematical function as a block diagram. Fig. 7-1

Parameter setting code

Adaptation of the function or the behaviour to the application. The possible settings are explained and shown in the text and/or the line diagram.

Output symbol

Designates the signal type. Connections with inputs of the same signal type are possible. (📖 7-4)

Every output is defined by a selection number. The selection numbers are divided into selection lists (1 ... 4) according to the different signal types. (📖7-225)

An output is linked to an input by the selection numbers.

Example:

(FCNT1, see Fig. 7-1)

- FCNT1-OUT ≙ selection number 6400 (analog signal, selection list 1).
- FCNT1-EQUAL ≙ selection number 6400 (dgitial signal, selection list 2).

Note!

Outputs, which are not linked, cannot be configured.

Output name

Consists of the FB name and a designation. Outputs with the same function are distinguished by a number behind their designation.

7.3.3 Connection of function blocks

General rules

- Assign a signal source to an input.
- One input can have only one signal source.
- Inputs of different function blocks can have the same signal source.
- Only the same types of signals can be connected. Thus, the analog output signal of one function block can only be connected to the analog input of the other function block.

Stop!

Existing connections, which are not desired, must be removed by reconfiguration. Otherwise, the drive cannot perform the desired function.

Note!

Lenze offers a net-list generator for the visualization of existing connections (see accessories: PC program GDC). (📖 13-4)

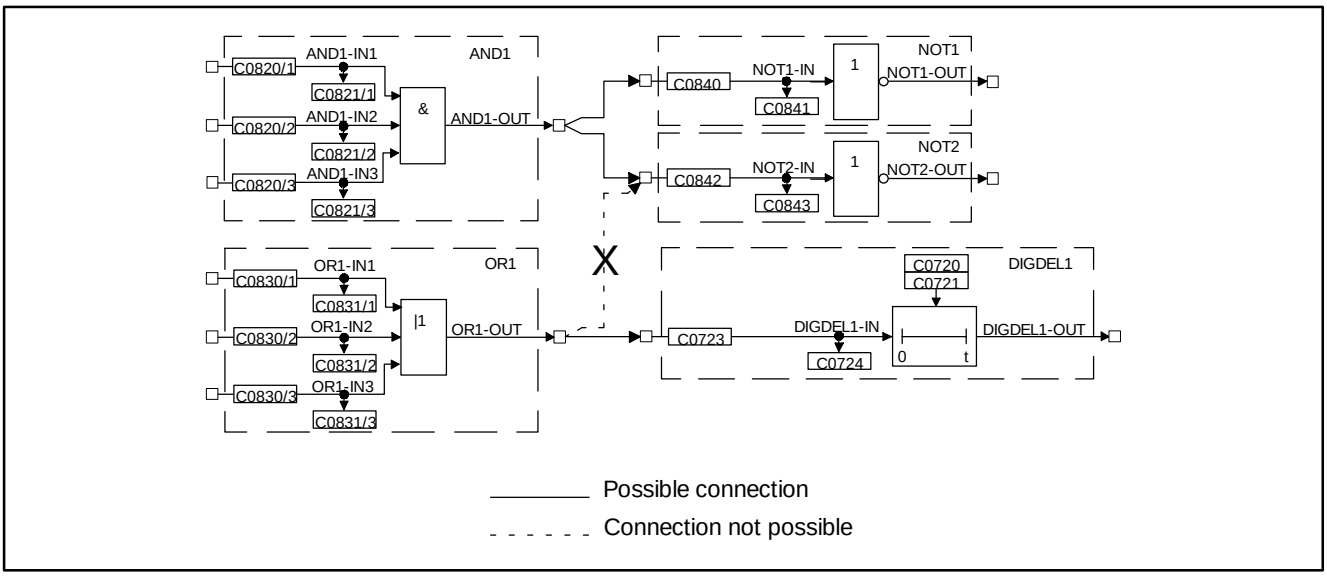

Fig. 7-2 Correct connection of function blocks

Basic procedure

1. Select the configuration code of the function block input which is to be changed.
2. Determine the source of the input signal for the selected input (e.g. from the output of another function block).
3. The function block input is assigned via a menu which contains only those signal sources which are of the same type as the function block input to be assigned.
4. Select and confirm the signal source.
5. Remove undesired connections, if any.
   – For this, select the corresponding signal assignment of the input via the configuration code (e.g. FIXED 0, FIXED 1, FIXED 0%, ...).
6. Repeat 1. to 5. until the desired configuration is set.
7. Save modified configuration in the desired parameter set.

Example

- Condition:
  – Factory setting
- Task:
  – Square the analog signal of X6/3, X6/4 and output to X6/62.
- Solution:
  – You need the function blocks AIN2, ARIT2 and AOUT2.

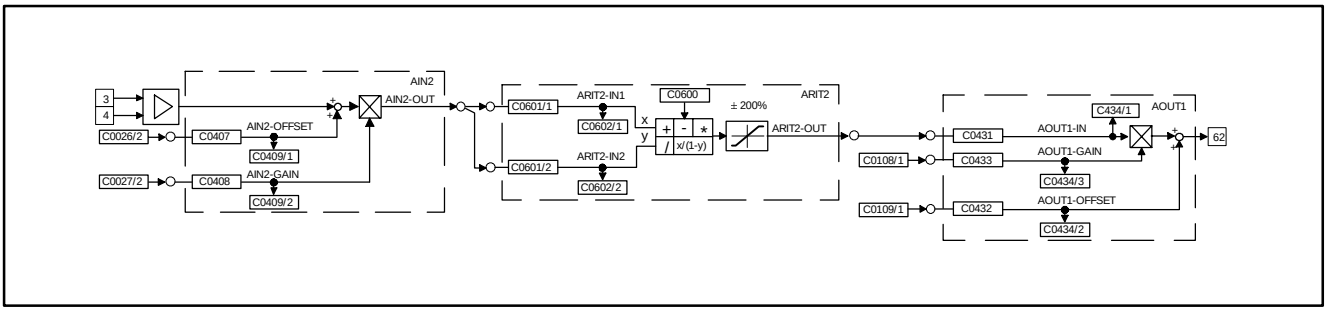

Fig. 7-3 Example of a simple configuration

Configuration

Create connections

1. Determine the signal source for ARIT2-IN1:
   – Change to the code level using the arrow keys
   – Select C0601/1 using ▲ or ▼.
   – Change to the parameter level using PRG.
   – Select output AIN2/OUT (selection number 55) using ▲ or ▼.
   – Confirm using SH + PRG
   – Change to the code level again using PRG.
2. Determine signal source for ARIT2-IN2:
   – Select C0601/2 using ▲.
   – Change to the parameter level using PRG.
   – Select output AIN2/OUT (selection number 55) using ▲ or ▼.
   – Confirm using SH + PRG
   – Change to the code level again using PRG.
3. Parameterise ARIT2:
   – Select C0600 using ▼.
   – Change to the parameter level using PRG.
   – Select multiplication (selection number 3).
   – Confirm using SH + PRG
   – Change to the code level again using PRG.
4. Determine signal source for AOUT1:
   – Select C0431 using ▼.
   – Change to the parameter level using PRG.
   – Select output ARIT2-OUT (selection number 5505).
   – Confirm using SH + PRG
   – Change to the code level again using PRG.
5. Enter function block ARIT2 in the processing table:
   – Select C0465 and subcode 8 using ▲.
   – Change to the parameter level using PRG.
   – Enter function block ARIT2 (selection number 5505).
   – Confirm using SH + PRG
   – Change to the code level again using PRG.
   – The sequence of the FB processing is thus determined.

Remove connections

- Since a source can have several targets, there may be further signal connections, which may not be wanted.
- Example:
  – In the factory setting of the basic configuration C0005 = 1000 (speed control), ASW1-IN1 and AIN2-OUT are connected.
  – This connection is not automatically removed by the settings described above! If you do not want this connection, it must be removed.

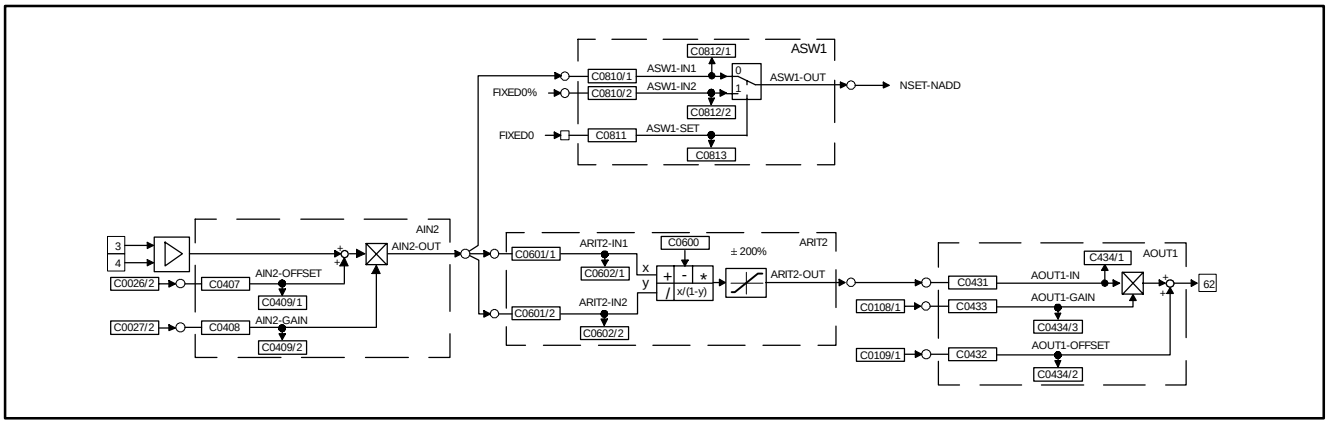

Fig. 7-4 Remove connections in a configuration

6. Remove connection between ASW1-IN1 and AIN2-OUT:
   – Select C0810/1 using ▲ or ▼.
   – Change to the parameter level using PRG.
   – Select the constant FIXED0% (selection number 1000) using ▲ or ▼.
   – Confirm using SH + PRG
   – Change to the code level again using PRG.

Now, the connection is removed.

7. Save new configuration, if desired:
   – If you do not want to lose the modifications after mains disconnection, save the new signal configuration under C0003 in one of the parameter sets.

7.3.4 Entries into the processing table

The 93XX controller provides a certain time for calculating the processing time of FBs. Since the type and number of FBs to be used depends on the application and can vary considerably, not all available FBs are permanently calculated. A processing table is therefore provided under code C0465, where only the FBs used are listed. This means that the drive system is perfectly matched to the task. If further function blocks are integrated into an existing configuration, they must be listed in the processing table.

Several aspects must be observed:

The number of FBs to be processed is limited

A maximum of 50 FBs can be integrated into a configuration. Every FB requires a certain processing time.Code C0466 displays the residual time for the processing of FBs. If this time has elapsed no further FBs can be integrated.

Entry sequence into the FBs

Normally, the entry sequence under C0465 is arbitrary, but it may be important for applications with high response. In general, the most favourable sequence is adapted to the signal flow.

Example:

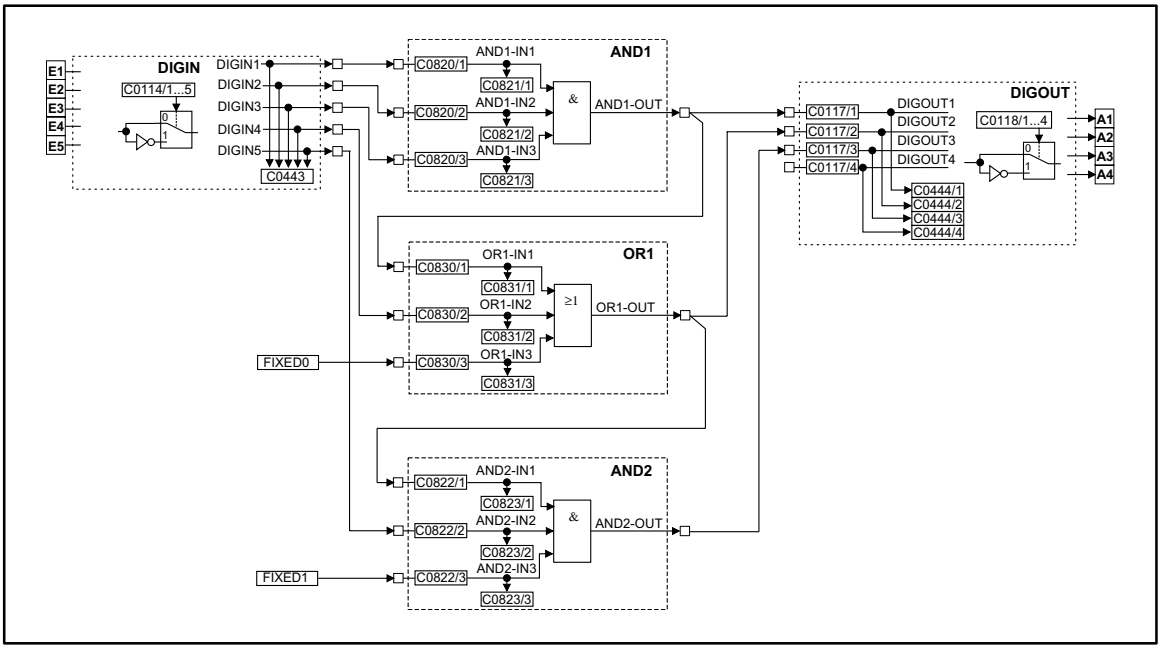

Fig. 7-5 Example of a configuration

Structure of the processing table for the configuration example in Fig. 7-5:

1. DIGIN does not have to be entered into the processing table.
2. The first FB is AND1, since it receives its input signals from DIGIN and is only connected to successors.
3. The second FB is OR1, since its signal source is the output of AND1 (predecessor). The output signal in AND1 must be generated before being processed in OR1. At the same time, OR1 has a successor. OR1 must therefore be entered in the processing table before the successor.
4. The third FB is AND2, since it has a predecessor (see 3.)

5. The entries under C0465 are:
   – Pos. 10: AND1 10500
   – Pos. 11: OR1 10550
   – Pos. 12: AND2 10505

This example was started with position 10 because these positions are not assigned in the default setting.

FBs do not have to be entered consecutively in the processing table. Empty positions in the processing table are permissible.

Note!

Other FBs can also be entered between the FBs listed in the example.

FBs which do not have to be entered into the processing table

The following signal sources are always executed and do not have to be entered into the processing table:

- AIF-IN
- CANx-IN
- DIGIN
- DIGOUT
- FCODE (all free codes)
- MCTRL
- Fixed signal sources (FIXED0, FIXED0%, etc.)

Frequent configuration faults

Malfunction	Cause	Remedy
FB does not supply an output signal	FB was not entered into the processing table C0465	Enter FB
FB only supplies constant signals	FB has been overwritten or deleted from the processing table C0465	Enter FB again, if necessary using a different subcode (list position)
The output signal is not sent to the next FB	No connection between the FBs	Make connection (following FBs) via the configuration code (CFG)
FB cannot be entered in the table C0465	Residual process time is too short (see C0466)	If necessary, delete all FBs not used (e.g. inputs and outputs not used) With DC-bus operation it might be possible to execute some functions via other controllers
The controller outputs internally calculated signals with a delay.	The processing sequence for the FBs is wrong.	Adapt the processing table to the signal flow (C0465).

7.3.4.1 Signal configuration with Global-Drive-Control

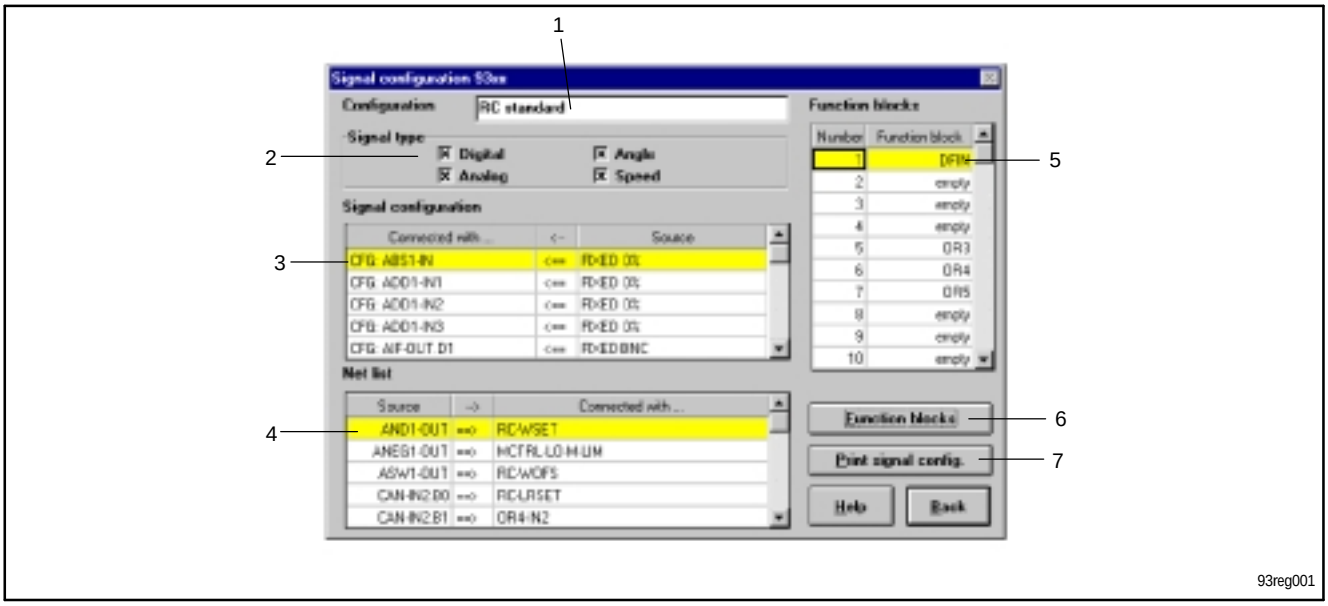

Fig. 7-6 Dialog box “signal configuration servo register controller 9300”

Field	Command	Function
	Initiate parameter menu	
	Open menu “Dialog signal configuration”.	
1	Click “Configuration”.	All signal configurations available are displayed in a window. ● Select the signal configuration required and confirm with “OK”.
2	Highlight the option for “Signal type” required.	Fields 4 and 5 only list the signal types available for the corresponding option.
3	Click an entry in “Signal link”.	All signal sources available for the FB input selected are displayed in a window. ● Select the signal source required and confirm with “OK”.
4	Click the entry under “Network list”.	The corresponding FB and its links are displayed in a window.
5	Click “Edit FB”.	All FBs available are displayed in a window. ● Select the FB required and confirm with “Accept”.
6	Click “Function blocks”.	All FBs available are displayed in a window.
7	Click “Print signal config.”.	Output of the current signal configuration to the printer.

Entry sequence for FBs

FBs must not be entered directly one after the other into the processing table. The easiest sequence is however the one following the signal flow chart. All positions must be assigned.

7.4 Terminal assignment

If you change the signal configuration under C0005, the assignment of all inputs and outputs with their corresponding default assignment is overwritten. If necessary, you have to adapt the function assignment to your wiring.

- The digital inputs are linked by the FB DIGIN. (📖 7-115)
- The digital outputs are linked by the FB DIGOUT. (📖 7-116)
- The analog inputs are linked by the FB AIN. (📖 7-56)
- The analog outputs are linked by the FB AOUT. (📖 7-62)

Stop!

If you link an FB input with a signal source, the already existing links are maintained. Remove links which are not required. (📖 7-9)

7.4.1 Freely assignable digital inputs

Five freely assignable inputs are available (X5/E1 ... X5/E5). The signals are conditioned and linked with other FBs by FB DIGIN. (📖 7-115)

Display links:

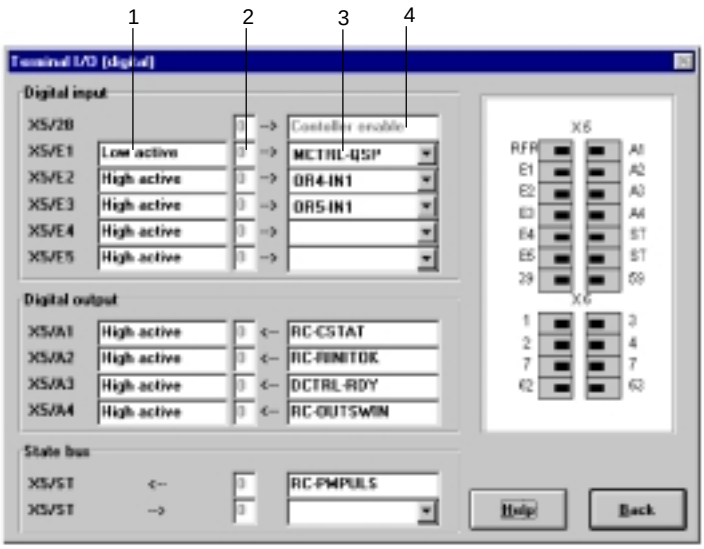

93reg002

Fig. 7-7 Dialog box "Terminal monitor 93xx (digital)"

Field	Command	Function
	Initiate parameter menu	
	Click on "Dialog terminal monitor 93xx (digital)" menu.	
1	Click on field.	Select signal level on which the input X5/E1 has to react.
2		Displays whether the input is triggered with a HIGH (1) or LOW (0) edge.
3	Click on field.	A window displays the existing links for the input X5/E1.
4		Input X5/28 is assigned with controller enable. Cannot be modified.

The display of the links of the terminals X5/E2 ... X5/E5 is done in the same way.

Tip!

In the “Dialog signal configuration” menu you can carry out all links to the FB DIGIN. (📖 7-12)

Field 3 (in Fig. 7-7 for terminal X5/E1) shows these links.

7.4.2 Freely assignable digital outputs

Four freely assignable digital outputs are available (X5/A1 ... X5/A4). The signals are conditioned and linked with other FBs by FB DIGOUT. (📖 7-116)

Change assignment:

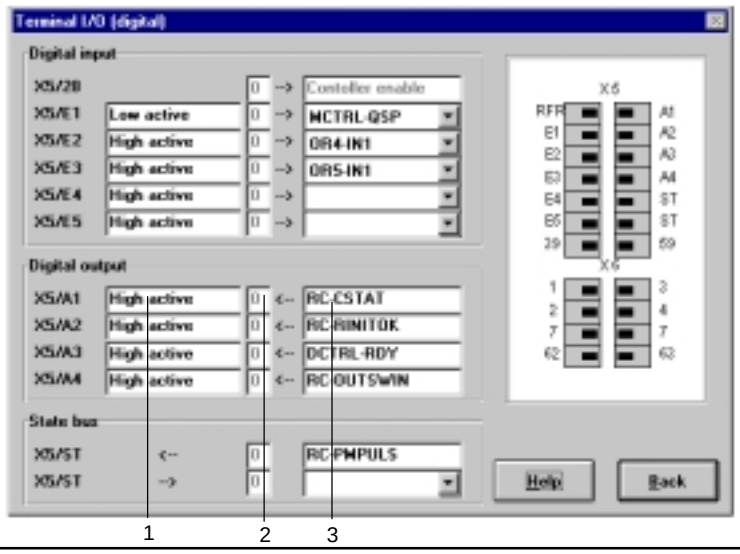

93reg002

Fig. 7-8 Dialog box “Terminal monitor 93xx (digital)”

Field	Command	Function
	Initiate parameter menu	
	Click on “Dialog terminal monitor 93xx (digital)” menu.	
1	Click on field.	Select signal level on which the output X5/A1 has to switch when it is triggered.
2		Displays whether the output is triggered with a HIGH (1) or LOW (0) edge.
3	Click on field.	A window displays all available links of the output X5/A1. ● Select link.

The assignment of the terminals X5/A2 ... X5/A4 is changed in the same way.

7.4.3 Input and outputof the STATE-BUS

Configure input and output of the FB STATE-BUS. (📖 7-171)

Change assignment:

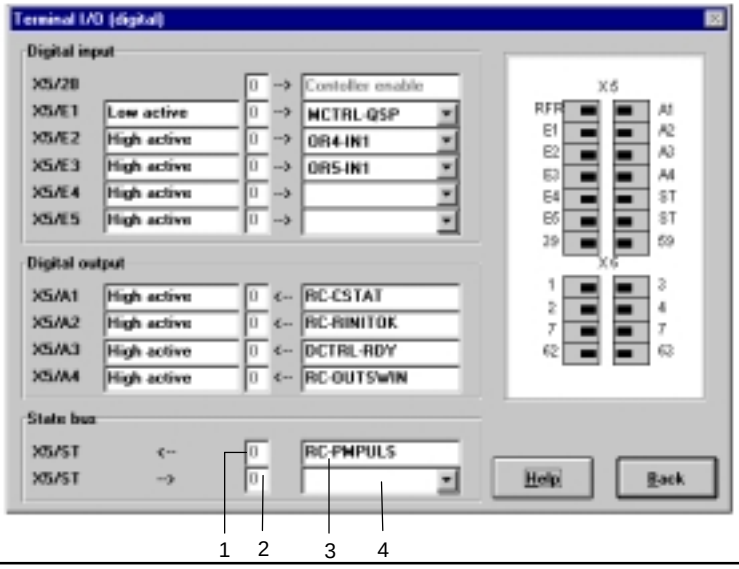

93reg002

Fig. 7-9 Dialog box “Terminal monitor 93xx (digital)”

Field	Command	Function
	Initiate parameter menu	
	Click on “Dialog terminal monitor 93xx (digital)” menu.	
1		Displays whether the output X5/ST is triggered with HIGH (1) or LOW (0) edge.
2		Displays whether the input X5/ST is triggered with a HIGH (1) or LOW (0) edge.
3	Click on field.	A window displays the available links by means of which the outgoing bus signal is to be output at terminal X5/ST. ● Select link.
4	Click on field.	A window displays the existing links by means of which the incoming bus signal is to be processed. ● Select link.

Tip!

In the “Dialog signal configuration” menu you can carry out all links to the FB STATE-BUS. (📖 7-12)

Field 4 displays these links.

7.4.4 Freely assignable analog inputs

Two freely assignable analog inputs are available (X6/1,2 and X6/3,4). The signals are conditioned and linked with other FBs by FB AIN. (📖 7-56)

Display links:

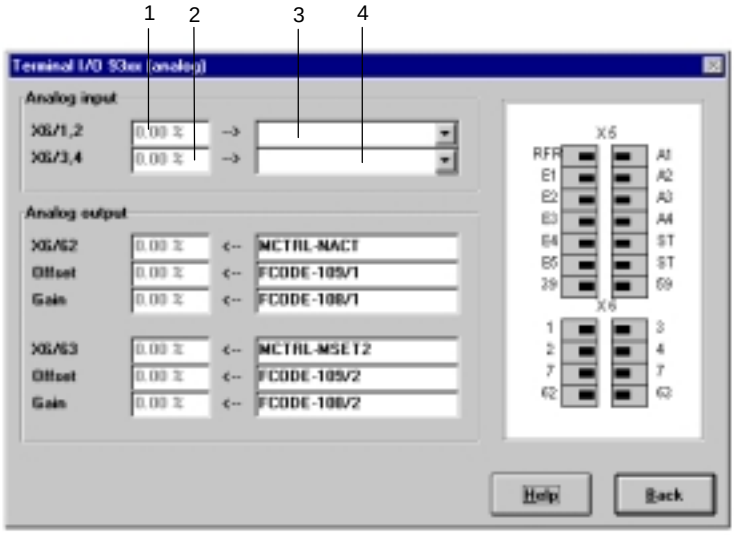

93reg003

Fig. 7-10 Dialog box “Terminal monitor 93xx (analog)”

Field	Command	Function
	Initiate parameter menu	
	Click on “Dialog terminal monitor 93xx (analog)” menu.	
1		Displays the input value at terminal X6/1,2.
2		Displays the input value at terminal X6/3,4.
3	Click on field.	A window displays the existing links for the input X6/1,2.
4	Click on field.	A window displays the existing links for the input X6/3,4.

Tip!

In the “Dialog signal configuration” menu you can carry out all links to the FB AIN. (📖 7-12)

Field 1 or field 2 diplays these links.

7.4.5 Freely assignable analog outputs

Two freely assignable analog outputs are available (X6/62 and X6/63). The signals are conditioned and linked with other FBs by FB AOUT. (📖 7-62)

Change assignment:

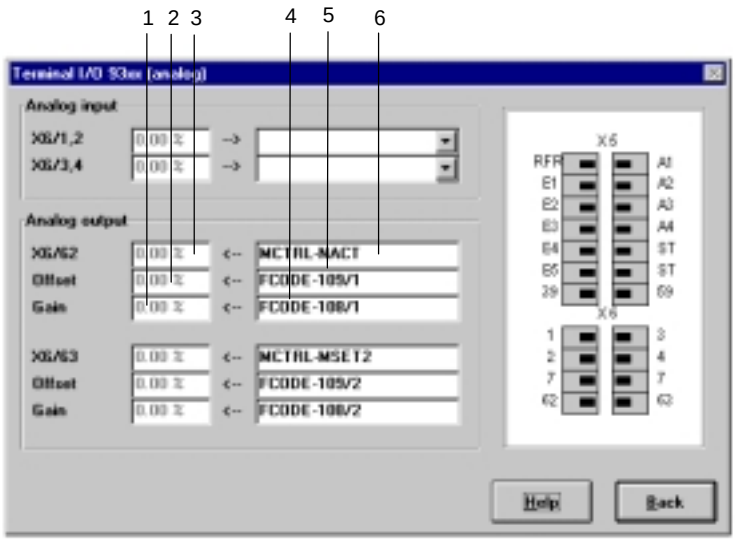

93reg003

Fig. 7-11 Dialog box “Terminal monitor 93xx (analog)”

Field	Command	Function
	Initiate parameter menu	
	Click on “Dialog terminal monitor 93xx (analog)” menu.	
1		Displays the value of the gain signal.
2		Displays the value of the offset signal.
3		Displays the output value at terminal X6/62.
4	Click on field.	A window displays the available links for the evaluation of the signal with a gain. ● Select link.
5	Click on field.	A window displays the available links for the evaluation of the signal with an offset. ● Select link.
6	Click on field.	A window displays all available links of the output X6/62. ● Select link.

The assignment of terminal X6/63 is changed in the same way.

7.5 Introduction into register control

As a basic function, the drive to be controlled in the register performs a phase ratio synchronization to a master (encoder or main drive).

The integrated register control also controls the motor shaft position relatively to a mark on the material using its function as a higher-level control circuit.

This allows a compensation of drifts between the mark and the master encoder position; the motor position is in-register to the material.

Applications

- Cross-cutter with cutting register control on printing and paper processing machinery
- Coating plants for coating using register marks
- Embossing stations for metal and plastic foils
- Web length control on printing machines. Inset printing using register marks.

The 9300 register control variant contains the following additional function units:

- Synchro system with a gearbox factor of high resolution (32-bit)
- Register actual value generation with window generation via the controller hardware. The mark sensors are directly connected to the controllers.
- Generation of a manipulated variable from the register difference
- Register control as higher-level control circuit

Key functions

- Register control
  – Register corrections are possible endlessly during operation
  – Integrated sensor compensation for gearbox factor adaptation
  – Teach function for the selection of the significant material register mark
  – Adjustable window for the detection of the register mark
  – Monitoring of the mark sensors
  – Adaptable control performance (averaging, filter times, control characteristic)
  – Insetter function
  – Variable manipulated variable limitation
- Parameterization in machine variables
  – Selection of cutting size and printing size in millimeter or inches
  – Adaptation to the previous machine using the parameters for encoder increments and material supply
- Direct reading of the register mark sensors
  – Adjustable dead time compensation for the sensors
  – Selection of cutting size and printing size in millimeter or inches
- All functions can be operated via fieldbus
  – INTERBUS, PROFIBUS and LECOM-A/B can be plugged in
  – System bus (CAN) is integrated into the controller

Tip!

The register control function block is described in the part ”Function library”. (📖 7-22)

7.6 Description of function blocks

Function blocks

Function block	Description		CPU time [µs]	used in basic configuration C0005						
				1000	4000	5000	6000	7000	30000	30003
RC	Register control	7-22	400						●	●
ABS1	Absolute value generator	7-49	4							
ADD1	Addition block	7-50	8							
AIF-IN	Fieldbus	7-51	60							
AIF-OUT	Fieldbus	7-54	56	●	●	●	●	●		●
AIN1	Analog input X6/1, X6/2	7-56	10	●	●	●	●	●		
AIN2	Analog input X6/3, X6/4		28	●	●	●	●	●		
AND1	Logic AND, block1	7-58	6						●	●
AND2	Logic AND, block2									
AND3	Logic AND, block3									
AND4	Logic AND, block4									
AND5	Logic AND, block5									
AND6	Logic AND, block6									
AND7	Logic AND, block7									
ANEG1	Analog inverter 1	7-61	4	●	●	●	●	●	●	●
ANEG2	Analog inverter 2									
AOUT1	Analog output X6/62	7-62	12	●	●	●	●	●	●	●
AOUT2	Analog output X6/63			●	●	●	●	●	●	●
ARIT1	Arithmetic block 1	7-64	11							
ARIT2	Arithmetic block 2									
ARITPH1	32-bit arithmetic block	7-67	15							
ASW1	Analog changeover 1	7-68	4	●		●			●	●
ASW2	Analog changeover 2									
BRK	Trigger holding brake	7-69	15							
CAN-IN1	System bus	7-73	-							
CAN-IN2	System bus									
CAN-IN3	System bus									
CAN-OUT1	System bus	7-80	56	●	●	●	●	●	●	
CAN-OUT2	System bus			●	●	●	●	●	●	
CAN-OUT3	System bus			●	●	●	●	●	●	
CMP1	Comparator 1	7-84	15	●	●	●	●	●	●	●
CMP2	Comparator 2								●	●
CMP3	Comparator 3									
CONV1	Conversion	7-88	8							
CONV2	Conversion									
CONV3	Conversion									
CONV4	Conversion									
CONV5	Conversion									
CONV6	Conversion									
CONVPHA1	32-bit conversion	7-90	6						●	●
CURVE1	Characteristic function	7-91	15							
DB1	Dead band	7-94	7							
DCTRL	Device control	7-95	-	●	●	●	●	●	●	●
DFIN	Digital frequency input	7-99	5	●	●	●	●	●	●	●
DFOUT	Digital frequency output	7-108	35	●	●	●	●	●	●	●
DFRFG1	Digital frequency ramp generator	7-102	40							
DFSET	Digital frequency processing	7-105	85			●	●	●		
DIGDEL1	Binary delay element 1	7-112	9							
DIGDEL2	Binary delay element 2									
DIGIN	Input terminals X5/E1…X5/E5	7-115	-	●	●	●	●	●	●	●

Function block library

Function block	Description		CPU time [µs]	used in basic configuration C0005						
				1000	4000	5000	6000	7000	30000	30003
DIGOUT	Output terminals X5/A1…X5/A4	🕮 7-116	-	●	●	●	●	●	●	●
DT1-1	Differential element	🕮 7-117	12							
FCNT1	Counter	🕮 7-118	11							
FDO	Free digital outputs	🕮 7-120	-						●	●
FEVAN1	Free analog input variable	🕮 7-122	4						●	●
FEVAN2	Free analog input variable								●	●
FEVAN3	Free analog input variable									
FLIP1	D-flipflop 1	🕮 7-127	6							
FLIP2	D-flipflop 2									
LIM1	Limiter	🕮 7-129	5							
MCTRL	Servo control	🕮 7-130	-	●	●	●	●	●	●	●
MONIT	Monitoring	🕮 7-222	-	●	●	●	●	●		
MPOT1	Motor potentiometer	🕮 7-137	20							
NOT1	Logic NOT, block1	🕮 7-139	4							
NOT2	Logic NOT, block2									
NOT3	Logic NOT, block3									
NOT4	Logic NOT, block4									
NOT5	Logic NOT, block5									
NSET	Speed setpoint conditioning	🕮 7-141	70	●	●	●				
OR1	Logic OR, block1	🕮 7-146	6			●	●	●		
OR2	Logic OR, block2									
OR3	Logic OR, block3								●	●
OR4	Logic OR, block4								●	●
OR5	Logic OR, block5								●	●
PCTRL1	Process controller	🕮 7-149	58							
PHCMP1	Comparator	🕮 7-152	8							
PHDIV1	Conversion	🕮 7-153	9							
PHINT1	Phase integrator	🕮 7-154	7							
PHINT2	Phase integrator									
PT1-1	1st order delay element	🕮 7-157	8							
R/L/Q	QSP / setpoint inversion	🕮 7-158	8	●	●					
REF	Homing function	🕮 7-158	100			●	●	●		
RFG1	Ramp generator	🕮 7-165	16							
S&H	Sample and Hold	🕮 7-167	4							
SRFG1	S-shaped ramp generator	🕮 7-168	15							
STAT	Digital status signals	🕮 7-170	-	●	●	●	●	●	●	●
STATE-BUS	State bus	🕮 7-171	-						●	●
TRANS1	Binary flank evaluation	🕮 7-172	7							
TRANS2	Binary flank evaluation									

Table of free codes

Function block	Description	CPU time [µs]	used in basic configuration C0005						
			1000	4000	5000	6000	7000	30000	30003
FCODE 17	free control codes, 🕮 7-119, 7-220	-	●	●	●	●	●	●	●
FCODE 26/1			●	●	●	●	●		
FCODE 26/2			●	●	●	●	●		
FCODE 27/1			●	●	●	●	●		
FCODE 27/2			●	●	●	●	●		
FCODE 32					●	●	●		
FCODE 37									
FCODE 108/1			●	●	●	●	●	●	●
FCODE 108/2			●	●	●	●	●	●	●

Function block	Description	CPU time [µs]	used in basic configuration C0005						
			1000	4000	5000	6000	7000	30000	30003
FCODE 109/1			●	●	●	●	●	●	●
FCODE 109/2			●	●	●	●	●	●	●
FCODE 141									
FCODE 250									
FCODE 471									
FCODE 472/1									
FCODE 472/2									
FCODE 472/3			●	●	●	●	●	●	●
FCODE 472/4									
FCODE 472/5					●	●	●		
FCODE 472/6					●	●	●	●	●
FCODE 472/7									
FCODE 472/8									
FCODE 472/9									
FCODE 472/10									
FCODE 472/11									
FCODE 472/12									
FCODE 472/13									
FCODE 472/14									
FCODE 472/15									
FCODE 472/16									
FCODE 472/17									
“FCODE 472/18									
FCODE 472/19									
FCODE 472/20									
FCODE 473/1					●	●	●	●	●
FCODE 473/2					●	●	●	●	●
FCODE 473/3					●	●	●		
FCODE 473/4								●	●
FCODE 473/5								●	●
FCODE 473/6								●	●
FCODE 473/7									
FCODE 473/8									
FCODE 473/9									
FCODE 473/10									
FCODE 474/1								●	●
FCODE 474/2								●	●
FCODE 475/1									
FCODE 475/2									
FCODE-ST473/1	Strobe signal from FCODE 473/1, 📖 7-119							●	●
FCODE-ST473/2	Strobe signal from FCODE 473/2, 📖 7-119							●	●
FCODE-ST474/1	Strobe signal from FCODE 474/1							●	●
FCODE-ST474/2	Strobe signal from FCODE 474/2							●	●

7.6.1 Register control (RC)

The function block RC includes the core functions of the register control in the controller.

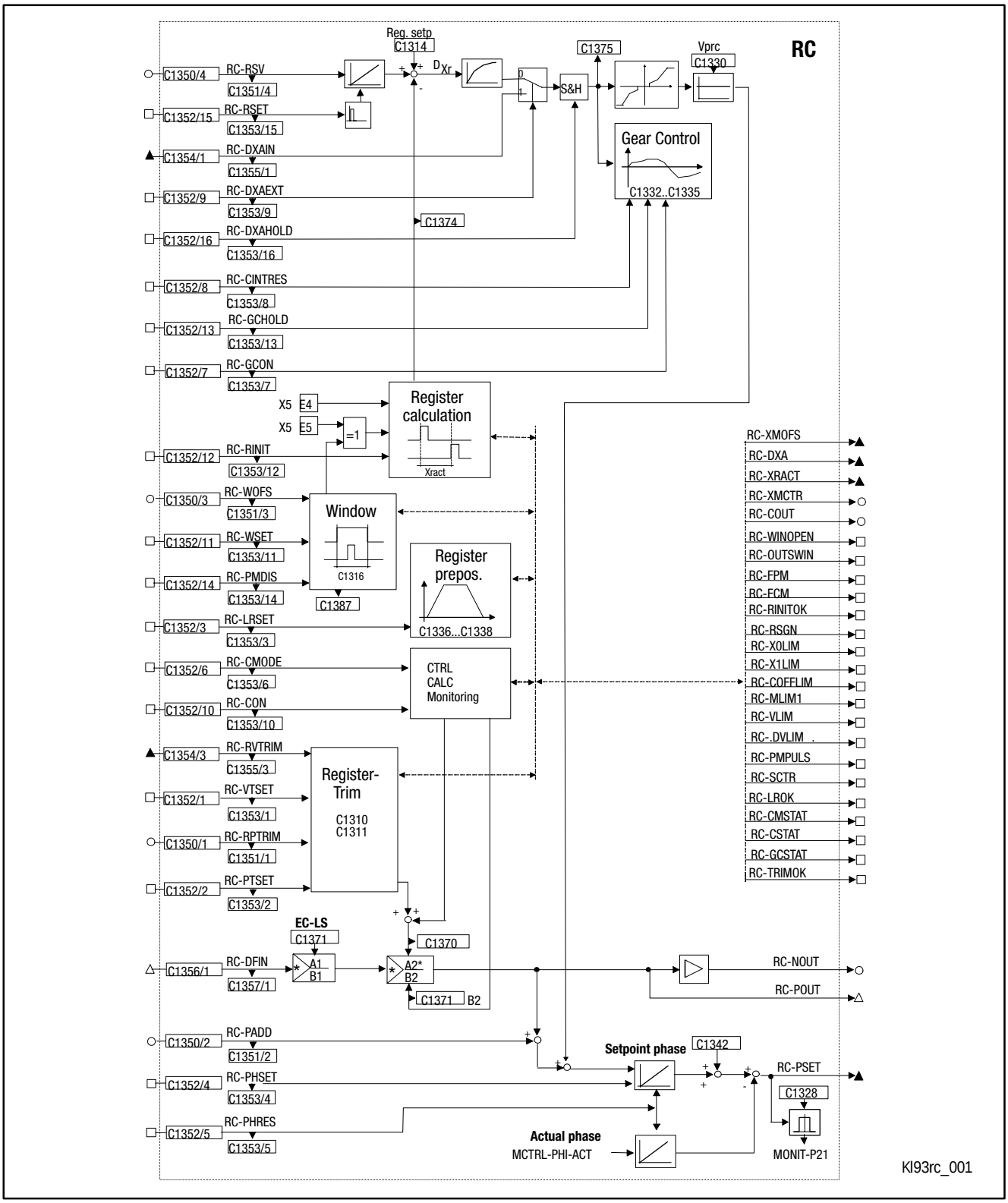

Fig. 7-12 Function block RC

Analog signals

Signal				Source			Note
Name	Type	DIS	DIS format	CFG	List	Lenze	
RC-RPTRIM	a	C1351/1	1/100 mm	C1350/1	1	19551	Rel. phase trimming value
RC-PADD	a	C1351/2	Incr.	C1350/2	1	1000	Rel. additive setpoint phase
RC-WOFS	a	C1351/3	1/100 mm	C1350/3	1	5650	Rel. label window offset
RC-RSV	a	C1351/4	1/100 mm	C1350/4	1	1000	Rel. register setpoint
RC-NOUT	a	-	-	13200	1		Speed setpoint (evaluated with A1/B1, A2*/B2)
RC-XMCTR	a	-	-	13201	1		Current distance label - window centre in 1/100 mm
RC-COUT	a	-	-	13202	1		Manipulated variable register controller in Incr./ms

Digital signals

Signal				Source			Note
Name	Type	DIS	DIS format	CFG	List	Lenze	
RC-VTSET	d	C1353/1	bin	C1352/1	2	1000	0 -> 1 edge Trim positioning length with value RC-RVTRIM
RC-PTSET	d	C1353/2	bin	C1352/2	2	19400	0 -> 1 edge Trim phase with value RC-PTRIM
RC-LRSET	d	C1353/3	bin	C1352/3	2	20201	0 -> 1 edge Set coarse register
RC-PHSET	d	C1353/4	bin	C1352/4	2	1000	1 -> static Set phase integrators to the same value (setpoint = actual value)
RC-PHRES	d	C1353/5	bin	C1352/5	2	10560	1 -> static Reset of phase integrators
RC-CMODE	d	C1353/6	bin	C1352/6	2	20204	Selection setting mode 0 = CF-based 1 = time-based
RC-GCON	d	C1353/7	bin	C1352/7	2	20203	Gearbox factor correction 0 = off 1 = on
RC-CINTRES	d	C1353/8	bin	C1352/8	2	20209	0 -> 1 edge Reset manipulated value integrator for gearbox factor correction (GTRIM) Reset of DIS:C1377
RC-DXAEXT	d	C1353/9	bin	C1352/9	2	20208	Register error input 0 = internal 1 = external
RC-CON	d	C1353/10	bin	C1352/10	2	10565	Register Control 0 = off 1 = on (observe link: 📖 7-36)
RC-WSET	d	C1353/11	bin	C1352/11	2	10500	0 -> 1 edge Shift label window by RC-WOFS
RC-RINIT	d	C1353/12	bin	C1352/12	2	10570	0 -> 1 edge Set up label and start register evaluation. Signal RC-RINITOK = 0. After initialization, the signal RC-RINITOK is set to 1.
RC-GCHOLD	d	C1353/13	bin	C1352/13	2	20210	Gearbox factor correction 0 = active 1 = stop

Function block library

Signal				Source			Note
Name	Type	DIS	DIS format	CFG	List	Lenze	
RC-PMDIS	d	C1353/14	bin	C1352/14	2	20205	Output of the 0->1 edge of the valid label pulse via the state bus as 1->0 edge tv <= 3 us, td <= 1ms Prerequisiste: RC-PMPULS is connected to the FB STATE-BUS.
RC-RSET	d	C1353/15	bin	C1352/15	2	1000	0 -> 1 edge Accept register setpoint value at RC-RSV and activate.
RC-DXAHOLD	d	C1353/16	bin	C1352/16	2	1000	Calculation of the register difference 0 = active 1 = inactive (last value is kept) Note: 1-signal affects the initialization procedure of the label evaluation
RC-LROK	d	-	-	13200	2		1 = setting of coarse register completed and selection = 0
RC-CMSTAT	d	-	-	13201	2		Status register setting mode: 0 = CF based, 1 = time based
RC-GCSTAT	d	-	-	13202	2		Status gear control (sensor compensation) 0 = off, 1 = on
RC-CSTAT	d	-	-	13203	2		Status register controller 0 = off, 1 = on
RC-RSGN	d	-	-	13204	2		Sign register difference 0 = positve, 1 = negative
RC-X0LIM	d	-	-	13205	2		1 = |register difference| > CCX0
RC-X1LIM	d	-	-	13206	2		1 = |register difference| > CCX1
RC-COFFLIM	d	-	-	13207	2		1 = |register difference| > COFF-LIM
RC-MLIM1	d	-	-	13208	2		1 = |register difference| > M-LIM1
RC-VLIM	d	-	-	13209	2		1 = line speed >= V-LIM
RC-FPM	d	-	-	13210	2		1 = error label pulse
RC-FCM	d	-	-	13211	2		1 = error cylinder pulse
RC-RINITOK	d	-	-	13212	2		1 = Initialization register evaluation completed
RC-WINOPEN	d	-	-	13213	2		Status label window 1 = window open (label pulse evaluation active)
RC-OUTSWIN	d	-	-	13214	2		1 = label pulse out of window Register difference DXA is set to zero internally
RC-SCTR	d	-	-	13215	2		Sign of RC-XMCTR 0 = positive, 1 = negative
RC-TRIMOK	d	-	-	13216	2		Status trimming phase / positioning length 0 = active, 1 = completed
RC-PMPULS	d	-	-	13217	2		Valid label pulse td = 1ms
RC-DVLIM	d	-	-	13218	2		Ramp detection (based on master encoder) 1 = switching threshold DVLIM (C1325) reached.

Speed signals

Signal				Source			Note
Name	Type	DIS	DIS format	CFG	List	Lenze	
RC-DFIN	phd	C1357/1	dec[rpm]	C1356/1	4	50	Master value input (phase difference of DFIN-OUT in incr. / ms)
RC-POUT	phd	-	-	13200	4		Speed setpoint (evaluated with A1/B1, A2*/B2) in incr./ms

Phase signals (long)

Signal				Source			Note
Name	Type	DIS	DIS format	CFG	List	Lenze	
RC-DXAIN	ph	C1355/1	dec [incr.]	C1354/1	3	1000	External input of register difference in incr.
RC-RVTRIM	ph	C1355/2	dec [1/100 °/oo]	C1354/2	3	1000	Setpoint of rel. length trimming. Reference: A2 1/100000 * A2
RC-PSET	ph	-	-	13201	3		Contouring error in incr.
RC-DXA	ph	-	-	13202	3		Register difference in incr.
RC-XRACT	ph	-	-	13203	3		Actual register value in incr.
RC-XMOFS	ph	-	-	13206	3		Momentary value of actual register offset in incr.

7.6.1.1 Phase ratio synchronizing

The phase ratio synchronizing with highly resolving ”Electronic gearbox factor” is the basis of the register control configurations 300xx. Phase setting commands are superimposed to the basic speed.

Main signal flow

FB DFIN

The master encoder signal is supplied via the X9 connector and converted into a speed/phase setpoint Xmaster (DFIN-OUT).

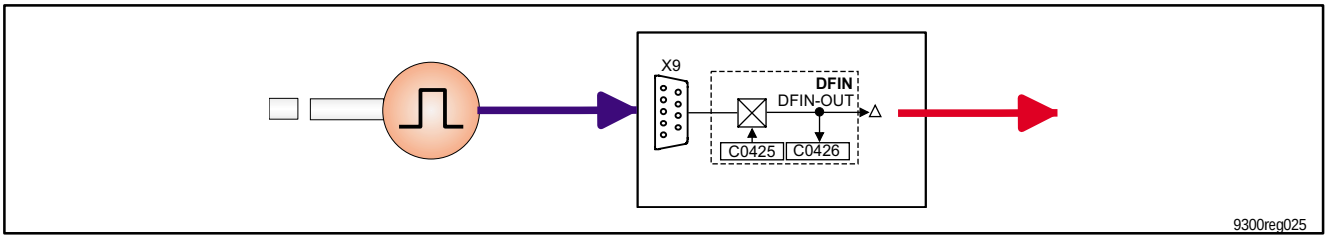

Fig. 7-13 Conversion of the master encoder signal

Function block library

FB RC

1. The master value Xmaster is evaluated such that a phase ratio synchronizing results between motor shaft (n_M) and master encoder ($n_{master\ encoder}$) with the following speed ratio:

C1303 = 0 (cross-cutter):

$$n_M[1/min] = n_{master\ encoder}[1/min] * \left(\frac{(LSF\ (C1300) * Gearnum\ (C1304)) + GTRIM}{CF\ (C1308) * Geardenom\ (C1305)}\right) * \frac{act.\ no.\ of\ increm.\ master\ encoder}{EC\text{-}LS\ (C1301)}$$

Display codes exist for the following terms:

LSF (C1300) * Gearnum (C1304) → A2 * (DIS:C1370)

CF (C1308) * Geardenom (C1305) → B2 * (DIS:C1371)

C1303 = 1 (Insetter)

$$n_M[1/min] = n_{master\ encoder}[1/min] * \left(\frac{(LSF\ (C1300) * Gearnum\ (C1304)) + GTRIM}{CCF\ (C1302) * Geardenom\ (C1305)}\right) * \frac{act\ no.\ of\ increm.\ encoder}{EC\text{-}LS\ (C1301)}$$

GTRIM are possible gearbox factor trimmings of the sensor compensation (📖 7-41) or the positioning length trimming RVTRIM. (📖 7-40)

Display codes exist for the following terms:

(LSF (C1300) * Gearnum (C1304)) + GTRIM → A2 * (DIS:C1370)

CCF (C1308) * Geardenom (C1305) → B2 (DIS:C1371)

2. The FB RC compares setpoint and actual phase and outputs the setpoint speed (RC-NOUT) and the contouring error (RC-PSET).
3. The phase manipulated value RC-COUT (DIS: C1376) created by the register control is added to the setpoint phase.

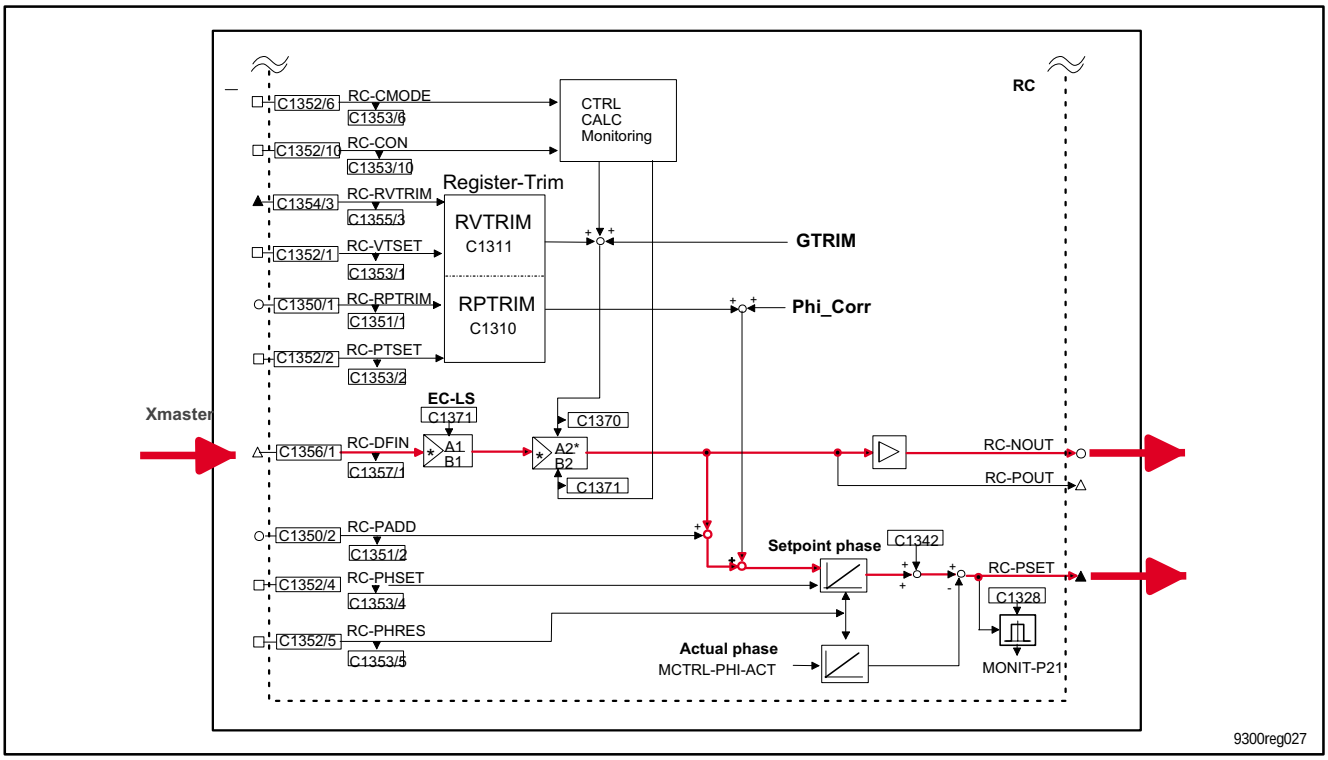

Fig. 7-14 Function block register control (RC)

FB MCRTL

This block carries out the motor control, consisting of phase, speed, current and current vector calculation.

The main setpoints are

- Speed setpoint: MCTRL-N-SET (DIS: C0906/1)
- Contouring error: MCRTL-PHI-SET (DIS: C0908)

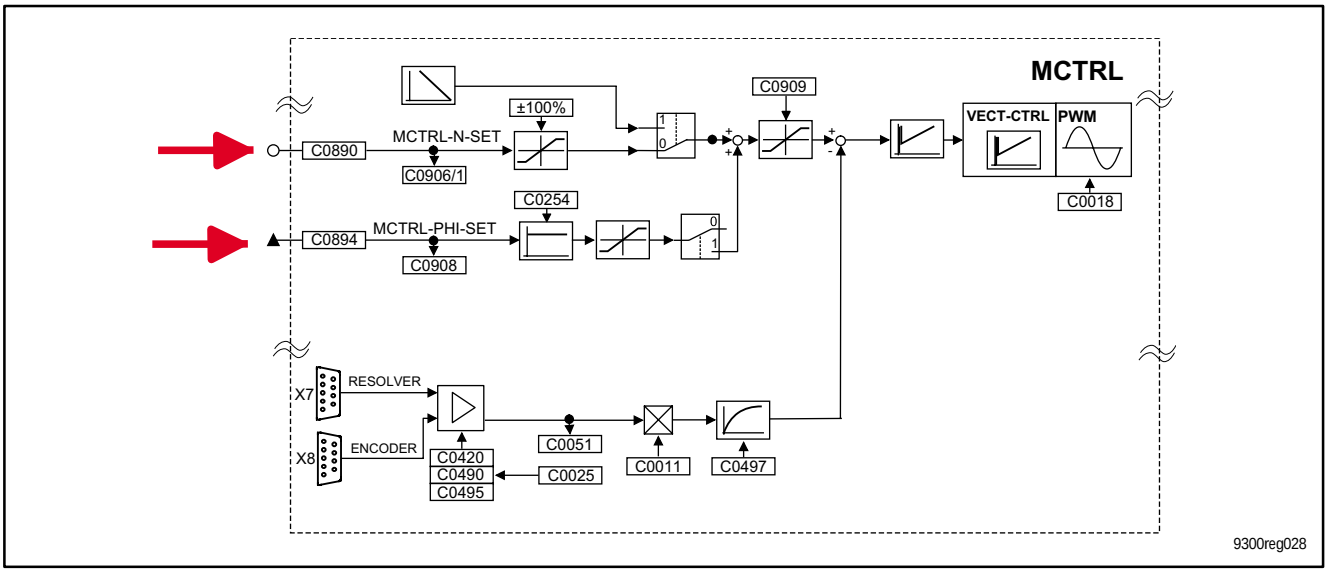

Fig. 7-15 FB MCTRL: Phase, speed, current vector calculation and current control.

7.6.1.2 Plant data

Purpose

Adaptation to mechanical plant features

Function

Code	LCD	Possible settings				IMPORTANT
		Lenze	Choice			
C1300	Shaft format	2304	192	{1 units}	16000	LSF length shaft format of the machine, material feed for one revolution
C1301	Enc const	8192	100	{1 p/rev}	32767	EC-LS, increments of the master encoder (e.g. at the mechanical longitudinal shaft of the machine) ● p/rev = pulses per revolution
C1302	CCF	5376	192	{1 units}	16000	Cylinder circumference Circumference of the driven roll (cutting cylinder or insetter roll)
C1303	MODE	0	0 0 1	 Cut mode Ins mode	1	Cross cutter / insetter determination of the operating mode
C1304	Gear-num	30000	-32768	{1}	32767	Gearbox "numerator", numerator of the mechanical gearbox ratio
C1305	Gear-denom	30000	1	{1}	32767	Gearbox "denominator", denominator of the mechanical gearbox ratio

Tip!

You should use the range of the codes Gear-num (C1304) and Gear-denom (C1305) to achieve optimum internal accuracies.

Example: A gear ratio of 3 is to be entered.

Input:

- Gear-num (C1304) = 30000
- Gear-denom (C1305) = 10000

7.6.1.3 Measuring system and format definitions

Purpose

Determination of the metric or imperial system (inch or millimeter) to enter machine-related data (units).

Function

Code	LCD	Possible settings			IMPORTANT
		Lenze	Choice		
C1306	Unit select	0			Selection measuring system (unit)
			0	1/192 ”	1 unit = 1/192”
			1	0.1 mm	1 unit = 0.1mm

Tip!

The unit 1/192 unit allows the exact representation of common fractions.

Example: 11 2/3 inch = 2240 units

7.6.1.4 Selection of the direction of rotation master encoder/motor

Purpose

Adaptation of the direction of rotation to mechanical features.

Function

Code	LCD	Possible settings			IMPORTANT
		Lenze	Choice		
C1307					Selection of the drive’s direction of rotation
1	DDIR	0	0	normal (CW)	
2	EDIR	0	1	inverse (CCW)	

Selection of the encoder’s direction of rotation	Selection of the motor’s direction of rotation	EDIR (C1307/2)	DDIR (C1307/1)
CW	CW	0	0
CW	CCW	0	1
CCW	CW	1	0
CCW	CCW	1	1

CW Clockwise rotation
CCW Counter-clockwise rotation
(when viewed to the encoder/motor shaft)

7.6.1.5 Product parameters

Purpose

Determination of the product-dependent parameters

Function

Code	LCD	Possible settings				IMPORTANT
		Lenze	Choice			
C1308	Cut format	2304	192	{1 units}	16000	Cut format (CF), input of the cutting length
C1309	Print format	4608	192	{1 units}	16000	Print format (PF), input of print format
C1316	TP-window	40	0	{1 mm}	999	Label window width for the label detection (E5) • 0 = window switched off

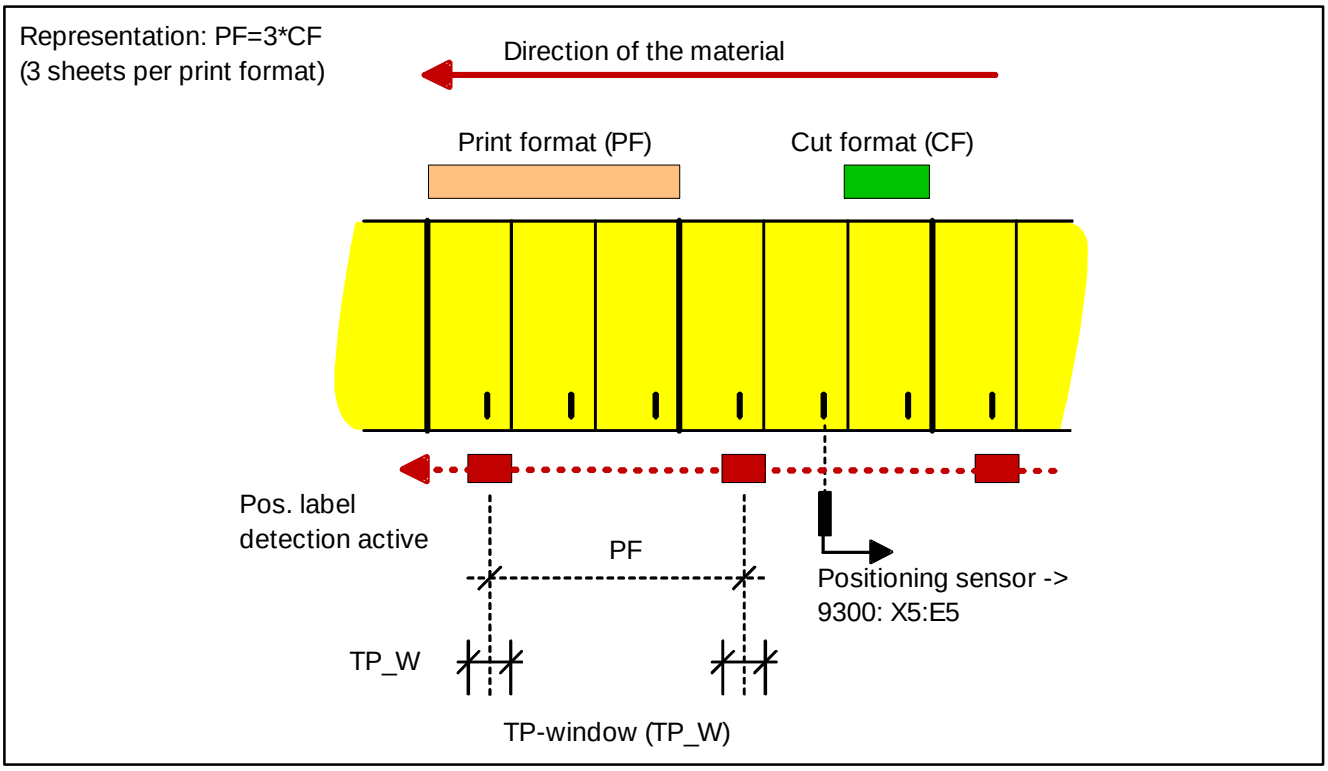

Fig. 7-16 Product-dependent parameters

Valid for the 9300 register control:

- One label per print format is evaluated.
- PF = n_F * CF
  with n_F = 1, 2, 3, ... (integer). n_F sheets per print format can be cut.
- Display codes:

Code	LCD	Possible settings				IMPORTANT
		Lenze	Choice			
C1360	DIS: LSF/CF		-21474836.48	{0.01}	21474836.47	Longitudinal shaft format / cut format
C1361	DIS: PF/CF		-21474836.48	{0.01}	21474836.47	Number of sheets

7.6.1.6 Initialization of register control

Purpose

Start of register control

Function

- Teach-In of the significant label
- Start of window generation for the label
- Start of actual register generation by measuring the position difference between label (E5) and cylinder label (E4) on the basis of master encoder increments.

The significant label is determined together with the machine set-up.

Set-up procedure 1 (direct initialization, FB input RC-DXAHOLD = 0)

1. Position the significant label (1 pulse in the range TP-W) up to approx. 10 mm before the detection position of the label reader.
2. Activate acceptance of the label in 9300. This is done alternatively with:
   – 0/1 edge at B input RC-RINIT.
   Condition: C1345/bit 5 = 0
   – Enter 0/1 signal in C1345/bit 5 (CR-RINIT).
   Condition: E3 = L
3. Start machine.
4. The position of the label, defined by an L/H edge at E5 starts the label window generation. The label window with the width TP-window (C1316) is laid symmetrically (+/- TP window/2) around the label. (📖 7-27)
   The period of the label window is 1 PF (C1308).
5. The initialization is completed with the detection of a cylinder label and another label. This is indicated by:
   – H-signal at FB output RC-RINITOK
   – 1-level in C1345/bit 4 (SR-RINITOK)

   The first label position relative to the cylinder label is saved as zero register and displayed in X0-OFFS (C1384).
6. Activate register control. This is done alternatively by:
   – H-signal at digital FB input RC-CON
   Condition: C1345/Bit 1 = 0
   – 1-signal in C1345/bit 1 (CR-CON)
   Condition: E2=L

   The register is kept on the zero register.
   Observe the other conditions for the activation of the register control. (📖 7-36)

Set-up procedure 2 (initialization with external enable, FB input RC-DXAHOLD = 1)

A modified set-up procedure is possible using the FB input RC-DXAHOLD.

1. Position the significant label (1 pulse in the range TP-W) up to approx. 10 mm before the detection position of the label reader.
2. Activate acceptance of the label in the controller. This is done alternatively with:
   – 0/1 edge at B input RC-RINIT.
     Condition: C1345/bit 5 = 0
   – Enter 0/1 signal in C1345/bit 5 (CR-RINIT).
     Condition: E3 = L
3. Start machine.
4. The position of the label, defined by an L/H edge at E5 starts the label window generation. The label window with the width TP-window (C1316) is laid symmetrically (+/- TP window/2) around the label. (📖 7-27)
   The period of the label window is 1 PF (C1308).
5. Interrupt of the initialization as soon as the FB input RC-DXAHOLD = 1. RC-DXAHOLD = 0: The initialization is completed when the next label is completed. This is indicated by:
   – H-signal at FB output RC-RINITOK
   – 1-level in C1345/bit 4 (SR-RINITOK)

   The position of the label detected after RC-DXAHOLD = 0 relative to the cylinder label is saved as zero register and displayed in X0-OFFS (C1384).
6. Activate register control. This is done alternatively with:
   – H-signal at digital FB input RC-CON
     Condition: C1345/Bit 1 = 0
   – 1-signal in C1345/bit 1 (CR-CON)
     Condition: E2=L

The register is kept on the zero register.
Observe the other conditions for the activation of the register control. (📖 7-36)

Tip!

Set-up procedure 2 can be used to avoid a corruption of the zero register by mechanical play during the machine start.

Generation of the actual register value

- The actual register value is generated with fast digital inputs on the basis of the
  – label pulse (X5:E5) and the
  – cylinder pulse (X5:E4)
- The rising edge is evaluated (no inversion possible with C0114).

Determination of the sign of the actual register

Fig.	Actual register XRACT (C1374)	Register difference DXA (C1375)	Motor adjustment, with active control acc. to table 📖 7-28
1	-	+	in the motor's direction of rotation
2	+	-	

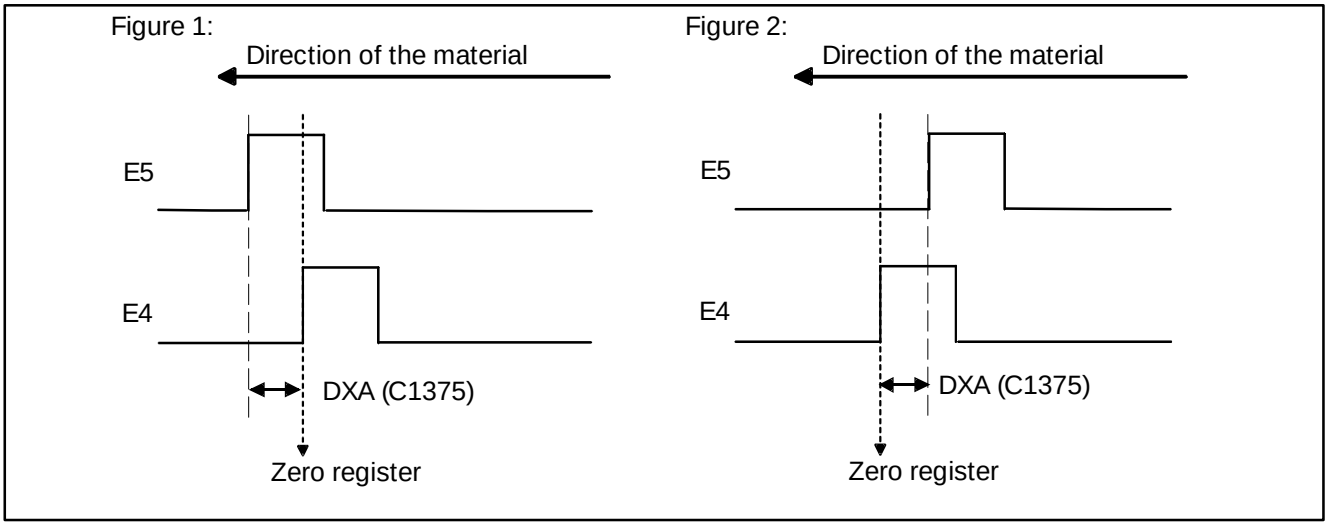

Fig. 7-17 Generation of the actual register value

E4 Cylinder pulse (CM)
E5 Label pulse (PM)

7.6.1.7 Dead time compensation of the label detection channels

Purpose

Register accuracy over the entire speed range

Function

Code	LCD	Possible settings				IMPORTANT
		Lenze	Choice			
C1320	TDCR-E4/E5	0	-2000	{1 µs}	2000	Relative dead time compensation of the runtime differences between E4 and E5 ● compensates register offset depending on the line speed
C1321	TDC-E5	0	-2000	{1}	2000	Absolute dead time compensation of the input E5 ● compensates relationship of the display C1387 and the line speed

Delays of the label detection sensors have the following effects:

Runtime differences between label and cylinder sensor

- Speed-dependent register offset
- Relative compensation with TDCR-E4/E5 (C1320)

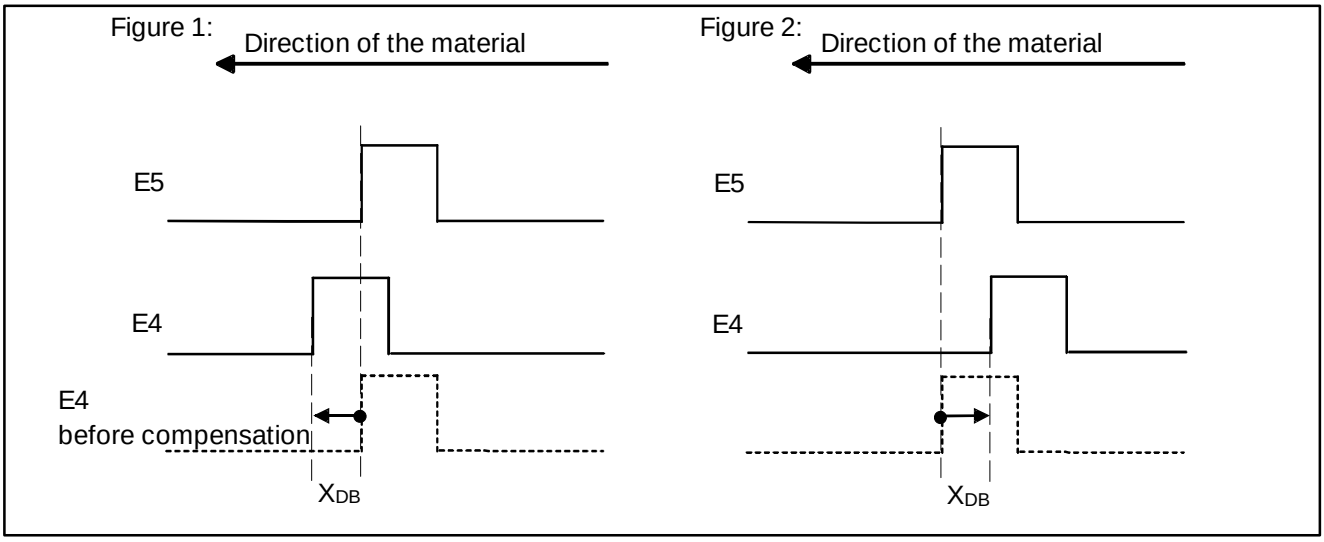

Fig. 7-18 Effect of the relative compensation

Fig.	TDCR-E4/E5 (C1320)	Motor adjustment, with active control acc. to table 📖 7-28
1	+	in the motor's direction of rotation
2	-	opposed to the motor's direction of rotation

Adjustment on the machine

1. Operate machine with minimum line speed (v_{line_min}) with the product. Initialize register controller and activate.
2. Operate machine with maximum line speed (v_{line_max}) with the product.
3. From the register offset Δs measured on the product, the following results:

$$\text{TDCR - E4/E5 (C1320) [µs]} = \frac{\Delta s\ [mm] * 60000}{V_{line_max} - V_{line_min}\ [m/min]}$$

Absolute reaction time of the label sensor

- Speed-dependent offset of the display XMCTR (C1387, distance between label to window centre).
- Absolute compensation with TDCR-E5 (C1321)

Adjustment on the machine

1. Operate machine with minimum line speed (v_{line_min}) with the product. Initialize register controller and activate.
2. Operate machine with maximum line speed (v_{line_max}) with the product.
3. Set the offset of the display XMCTR (C1387) to zero by entering a positive value in TDCR-E5 (C1321) XMCTR (C1387).

7.6.1.8 Label window

Purpose

Usage of contrast transitions in the print as a label.

Function

Code	LCD	Possible settings				IMPORTANT
		Lenze	Choice			
C1316	TP-window	40	0	{1 mm}	999	Label window width for the label detection (E5) ● 0 = window switched off
C1317	TP-win offset	0.00	-99.99	{0.01 mm}	99.99	Relative label window offset

- The window width is entered in TP-W (C1316)
- The label window is centered around the label when the register evaluation is started. A relative offset of the window position can be carried out as follows:

1. Input of an offset value in W-OFS (C1317). It is entered when the code is written.
2. Configure function block input RC-WOFS to a ”free code”. Enter offset value in the ”free code”.
   – This is done with a 0⇨1 edge at RC-WSET.
   – This can be done several times.

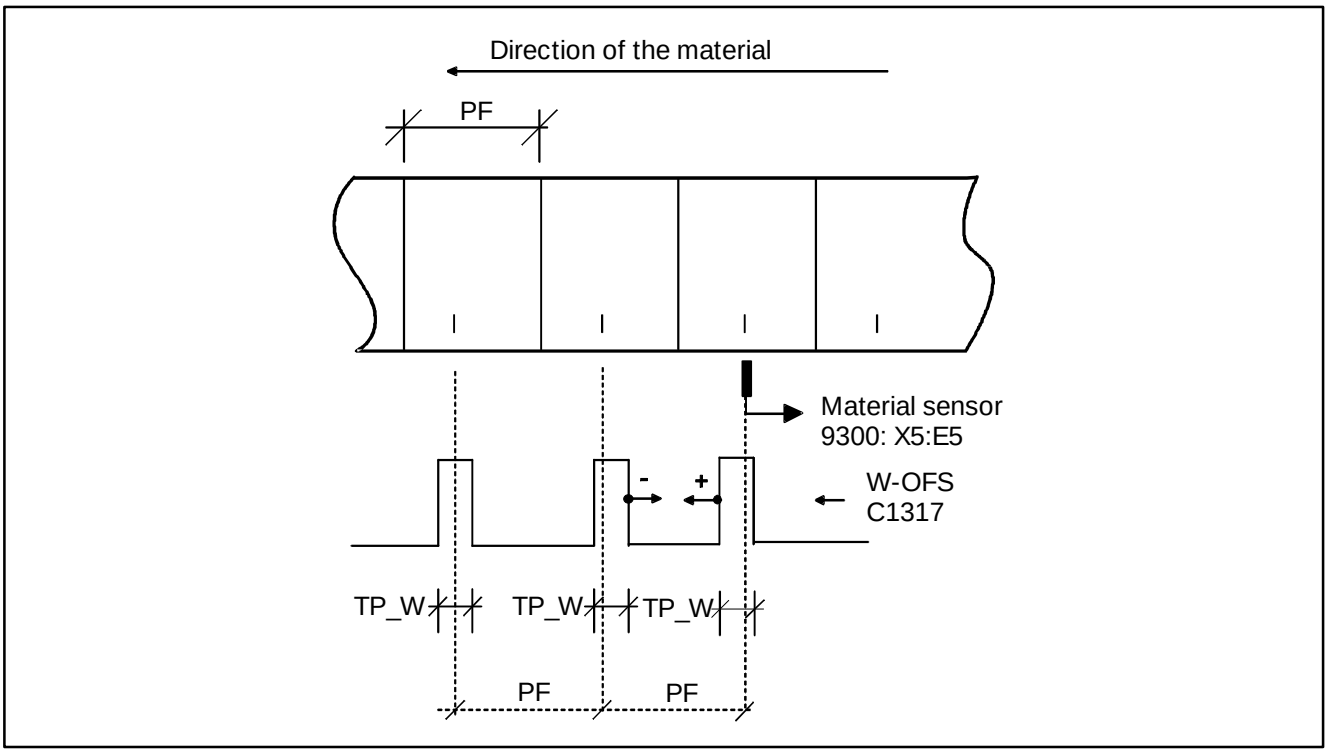

Fig. 7-19 Label window

Tip!

An automatic window correction can be activated, if necessary. This is done by entering a value ≠ 0 to the codes C0473/5 and C0473/6.

Code	LCD	Lenze	Unit	Choice	IMPORTANT
C0473					Freely assignable code
4	FCODE abs	500	1/100 mm	Condition for the execution of the setting commands: Distance material label - window width > value C0473/4 Execution: 1 control command per material label	für absolute analog signals Recommended offset:
5	FCODE abs	0	1/100 mm	Control command for a window offset in negative direc-	-100
6	FCODE abs	0	1/100 mm	tion Control command for a window offset in negative direc- tion	+100

7.6.1.9 Setpoint register input and generation of manipulated value

Purpose

Modification of the register with activated register control and compensation of register differences.

Function

The adjustment of registers and the compensation of register differences is achieved by a phase offset of the motor shaft. The phase position between motor shaft and master encoder shaft is modified.

Basic signal flow

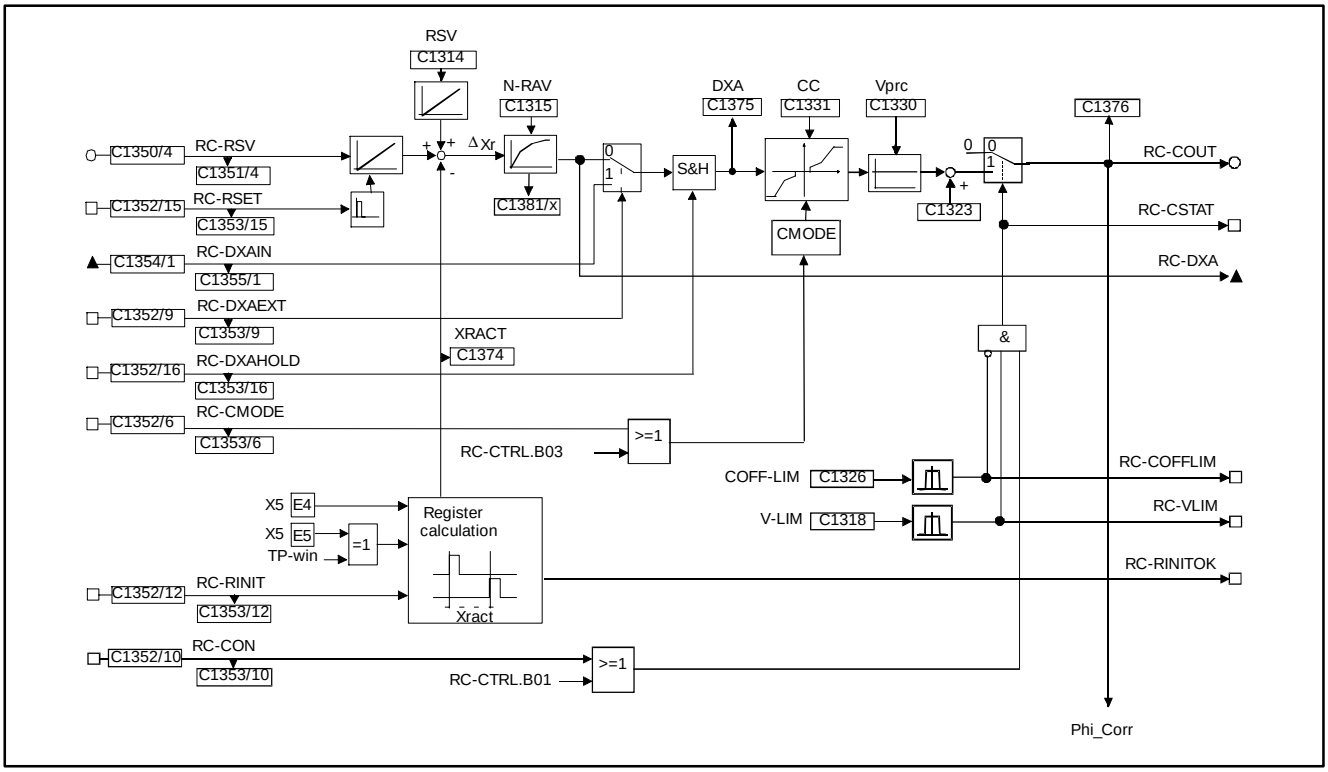

Fig. 7-20 Basic signal flow

Code	LCD	Possible settings				IMPORTANT
		Lenze	Choice			
C1314	Reg setpoint	0.00	-999.99	{0.01 mm}	999.99	Register setpoint
C1315	N-RAV	1	1	{1}	30	Filter register difference Number of register error values which are used to generate an average value
C1319	Time ref	1000	1	{1 ms}	1000	Time reference for RC-CMODE=1
C1330	Vprc reg ctrl	1.00	-99.99	{0.01 1/CF}	99.99	Vprc, Proportional gain of the register control
C1331			0.00	{0.01mm}	99.99	Control characteristic of the register control
1	CCX0	0.01				
2	CC+Y0	0.02				
3	CC-Y0	0.02				
4	CCX1	1.00				
5	CC+Y1	0.10				
6	CC-Y1	0.10				
7	CCX2	20.00				
8	CC+Y2	3.00				
9	CC-Y2	3.00				

- Register setpoints are entered with a sign and relative with
  – code RSV (C1314).
  It is accepted when the code is written.

  or
  – FB input RC-RSV.
  It is accepted with a 0⇨1 edge at RC-RSET.
- The activation of the register control (RC-CSTAT = 1) is immediately followed by the execution.
- The determination of the direction and the sign can be obtained from the following table.

Sign of Reg.setp (C1314)/RC-RSV	Motor adjustment, with active control acc. to table 📖 7-28
+	in the motor's direction of rotation
-	opposed to the motor's direction of rotation

- The register difference □Xr is averaged by a number of values to be selected using N-RAV (C1315). The last 6 □Xr values are displayed in DXR (DIS:C1381).
- You can switch to external input of the register difference via the FB input RC-DXAIN using RC-DXAEXT.
- The current value of the register difference can be frozen using RC-DXAHOLD = 1 and held for the time of the 1-signal.
- The register difference into a phase adjustment of the motor shaft is converted according to the set control characteristic and the selected phase setting mode.

Control characteristic and phase setting mode

The following modes are possible:

1. Distance-based
   – Condition:
   FB input RC-CMODE = 0 and
   control word C1345/bit 5 = 0
   – The phase adjustment DPHI is related to the material distance of 1 CF (C1308). The size results from the register difference DXA, the control characteristic CCY (C331) and the gain Vprc (C1330).
   The unit of the phase adjustment is mm/CF.
2. Time-based
   – Condition:
   FB input RC-CMODE = 1 or
   control word C1345/Bit 5 = 1 and
   current line speed > V-LIM (C1318)
   – The phase adjustment DPHI is time-based. The value of the time basis can be set using T-REF (C1319).
   The default setting is mm/s (C1319 = 1000ms)

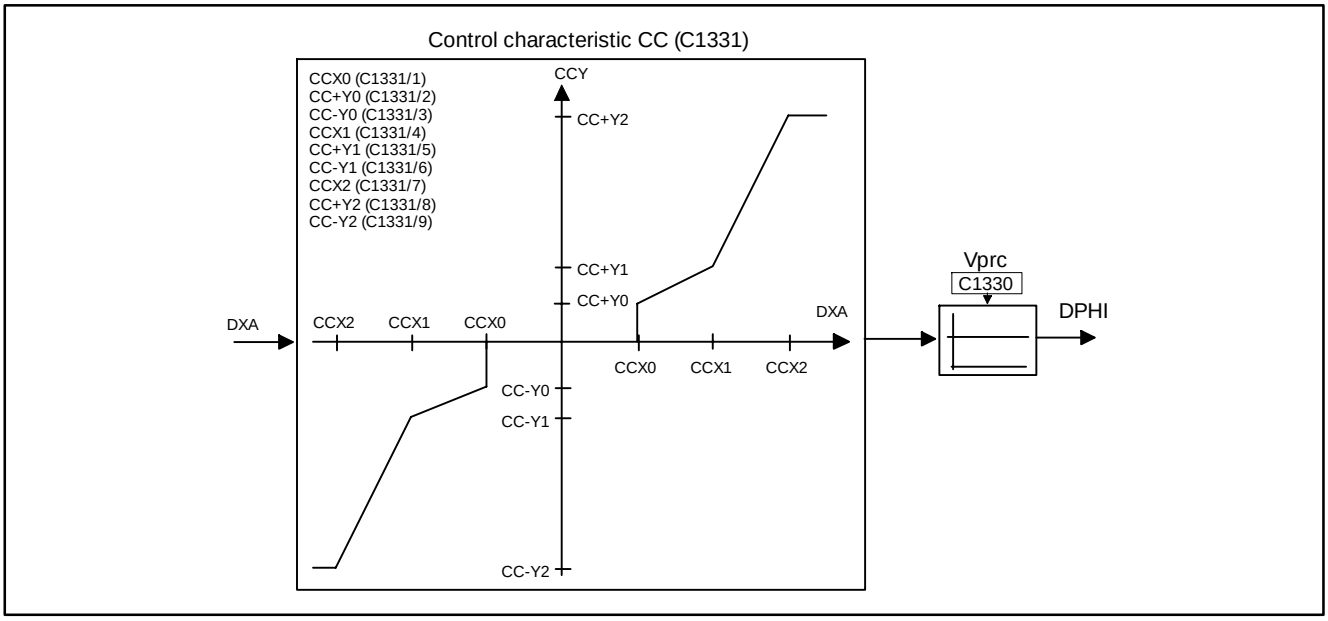

Fig. 7-21 Control characteristic CC (C1331)

Activation of the register control

Condition:

- FB input RC-CON = 1
  or
- control word C1345 bit 1 = 1
  and
- current line speed > V-LIM (C1318)
  and
- current register difference < COFF-LIM (C1326).

Status of the register control

- RC-CSTAT (A1) = 1 ➔ register control is active
- RC-CSTAT (A1) = 0 ➔ register control is inactive

Note

The register control is factory-set to slow register corrections (trend control). Fast register corrections (e.g. for a sheet-to-sheet correction) can be achieved as follows:

- Select distance-based setting mode.
- Set control characteristic to linear function.
  – Example:
  CCX0 = 0
  CC+Y0 = 0
  CC-Y0 = 0
  CCX1 = 5
  CC+Y1 = 5
  CC-Y1 = 5
  CCX2 = 50
  CC+Y2 = 50
  CC-Y2 = 50
- Select V_{prc} (C1330) between 0.8 and 1.2.

7.6.1.10 Register trimming RPTRIM

Purpose

Fine register trimming with inhibited or activated register control.

Function

A relative register trimming is possible any time, even when the register control is switched off. The control can be added immediately by adapting the internal zero register.

Code	LCD	Possible settings				IMPORTANT
		Lenze	Choice			
C1310	RPTRIM	0.00	-999.99	{0.01 mm}	999.99	Register trimming, relative

- Register trimmings are entered with a sign and relative with
  – Code RPTRIM (C1310).
  It is accepted when the code is written.
  or
  – FB input RC-RPTRIM.
  It is accepted with a 0⇨1 edge at RC-PTSET.
- The trimming is executed immediately after accepting the value, considering the control characteristic and the setting mode CMODE. (📖 7-30)
- The trimming status is indicated by:
  – FB output RC-TRIMOK and
  – Status word C1365/bit 14
  (0 = trimming active / 1 = trimming completed)
- The currently remaining trimming distance is displayed in RTR-RACT (DIS:C1379).
- The determination of the direction and the sign can be obtained from the following table.

Sign RPTRIM (C1310)/RC-RPTRIM	Motor adjustment according to the table when the motor is active 📖 7-28
+	in the motor's direction of rotation
-	opposed to the motor's direction of rotation

7.6.1.11 Material length trimming RVTRIM

Purpose

Setting of the basic material tension (material length) with inhibited or activated register control.

Function

The material length trimming is added to the basic gearbox factor and thus to the basic speed. (📖 7-25)

Code	LCD	Possible settings				IMPORTANT
		Lenze	Choice			
C1311	RVTRIM	0.00	-999.99	{0.01 ‰}	999.99	Absolute material length trimming, input of the material length (stretch factor) ● ‰ referred to the basic value A2
C1322	VTRIM	0.10	-999.99	{0.01 ‰/CF}	999.99	Speed of the gearbox factor adjustment with material length trimming

- Material length trimming is entered with sign and absolute with
  - Code RVTRIM (C1311).
    The value is accepted when the code is written.
    or
  - FB input RC-RVTRIM.
    It is accepted with a 0⇨1 edge at RC-VTSET.
- The trimming is executed immediately after accepting the value with the speed VTRIM (C1322).
- The trimming status is indicated by:
  - FB output RC-TRIMOK and
  - Status word C1365/bit 14
    (0 = trimming active / 1 = trimming completed)
- The determination of the direction and the sign can be obtained from the following table.

Sign RVTRIM (C1311)/RC-RVTRIM	Gearbox factor A2* (C1370)	Material tension
+	>	<
-	<	>

7.6.1.12 Gear control

Purpose

- Automatic correction of the basic material tension (material length) for changing material features (e.g. within a paper roll).
- Automatic determination of the basic material tension (material length).

Function

Generation of a correction value GTRIM (DIS:C1377). This is added to the basic gearbox factor. (📖 7-25)

The gear control can only be activated when the register control (RC-STAT=1) is switched on.

Basic signal flow

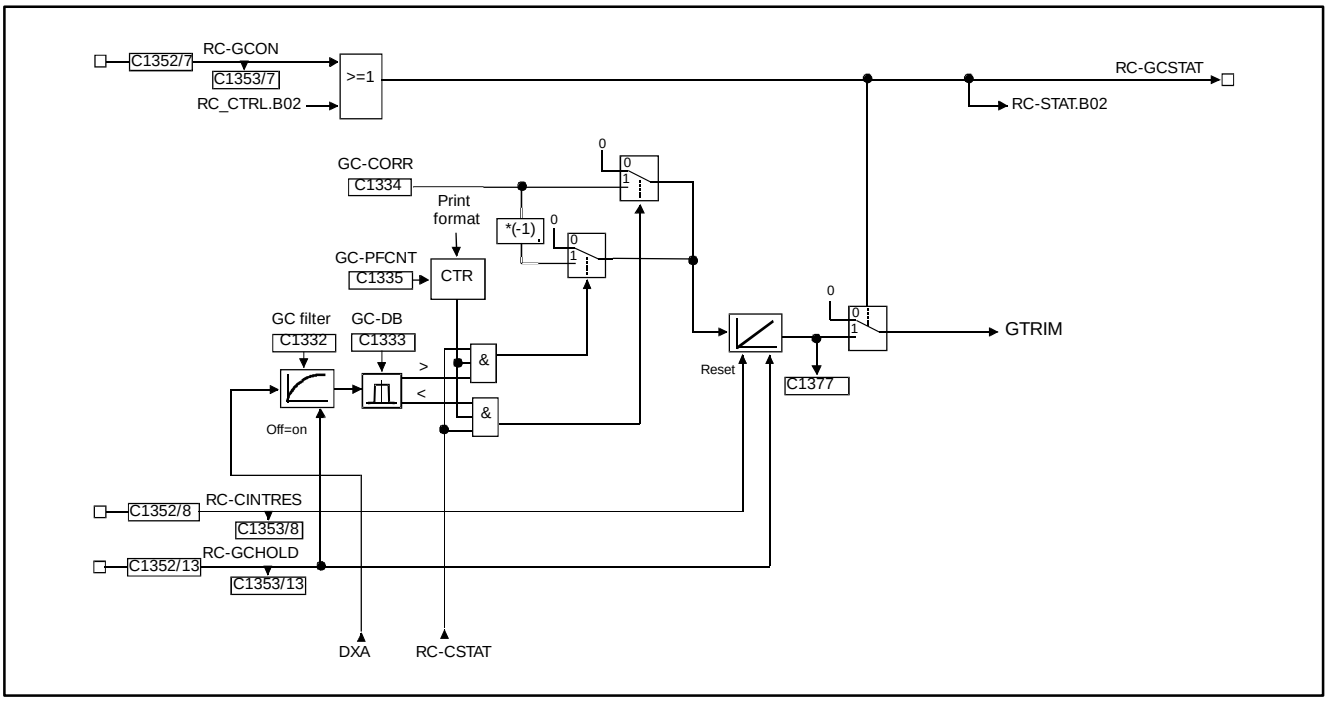

Fig. 7-22 Gear control

Code	LCD	Possible settings				IMPORTANT
		Lenze	Choice			
C1332	GC filter	2.00	0.01	{0.01 s}	50.00	GC filter ● Filter time of the sensor compensation for gear control
C1333	GC-DB	0.10	0.00	{0.01 mm}	99.99	GC-DB ● Dead range of the sensor compensation for gear control
C1334	GC-CORR	1	-32768	{1 PF}	32767	GC-CORR ● Control time the sensor compensation for gear control ● Unit: LSB of basic value DIS:A2*/DIS:B2
C1335	GC-PFCNT	10	0	{1}	9999	GC-PFCNT ● Format counter gear control. Number of format pulses followed by a control command.

Control signals of the gear control

Signal				Source		
Name	**Type**	**DIS**	**DIS format**	**CFG**	**List**	**Note**
RC-GCON	d	C1353/7	bin	C1352/7	2	Gear control 0 = off 1 = on
RC-CINTRES	d	C1353/8	bin	C1352/8	2	0 -> 1 edge Reset maninpulated variable integrator for gear control Reset of DIS:C1377
RC-GCHOLD	d	C1353/13	bin	C1352/13	2	Gear control 0 = active 1 = stop
RC-GCSTAT	d	-	-	13202	2	Status gear control (sensor compensation) 0 = off, 1 = on

7.6.1.13 Set coarse register

Purpose

Adjustment of the cut (cylinder position) by large values.

Function

Profile generator for a relative positioning of the cutting cylinder or the insetter roll.

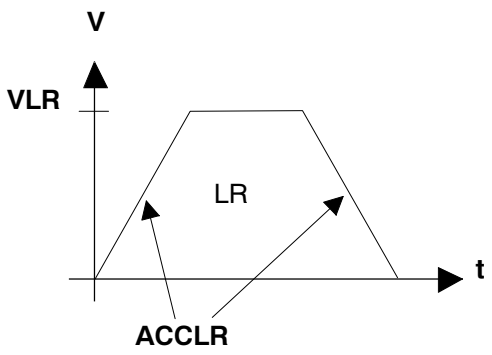

Fig. 7-23 Function coarse register

Code	LCD	Possible settings				IMPORTANT
		Lenze	Choice			
C1336	Reg. prepos.	2.00	-16000.00	{0.01 mm}	16000.00	LR ● Rel. adjustment distance of the function "Set coarse register" ● The distance refers to the material
C1337	VLR	400	0	{1 mm/s}	16000	● Final speed of the function Set coarse register ● Reference: Roll circumference (CCF)
C1338	ACCLR	400	0	{1 mm/s^2}	32767	● Acceleration/deceleration ramp of the function Set coarse register ● Reference: Roll circumference (CCF)

- Relative adjustment distance LR (C1336), referred to the material
  – Adjustment phase of the motor shaft when MSYS (C1306) = 0:

$$\Delta_{Motor}[°] = \frac{360° * \text{Gearnum (C1303)} * \text{LR (C1336) [mm]} * 1920}{\text{Geardenom (C1304)} * \text{CF (C1308) ['/192]} * 254}$$

  – Adjustment phase of the motor shaft when MSYS (C1306) = 1:

$$\Delta_{Motor}[°] = \frac{360° * \text{Gearnum (C1303)} * \text{LR (C1336) [mm]} * 10}{\text{Geardenom (C1304)} * \text{CF (C1308) [mm/10]}}$$

- The determination of the direction and the sign can be obtained from the following table.

Sign LR (C1336)	Motor adjustment, with active control acc. to table 📖 7-28
+	in the motor's direction of rotation
-	opposed to the motor's direction of rotation

- The control is executed with:
  – FB input RC-LRSET = 1 or
  – Control word C1345/bit 0 = 1
- The status of the positioning is indicated by:
  – FB output RC-LROK and
  – Status word C1365/bit 0
- The function "Set coarse register" can only be executed when the register control is inhibited.

7.6.1.14 Phase trimming

Purpose

Adjustment of the cut (cylinder position) depending on the speed to compensate e.g. the speed-dependent torsion of mechanical shafts.

Function

Addition of a phase offset depending on the speed.

Code	LCD	Possible settings				IMPORTANT
		Lenze	Choice			
C1342	Phase n-trim	-894	-32768	{1 incr}	32767	RC speed-dependent phase trimming ● Range: ±0.5 motor revolutions ● Reference: 15000 rpm

Note

C1342 is set to a default value when a feedback system (C0025) is selected. This corresponds to the zero value (no trimming).

7.6.1.15 Messages and monitoring

The monitoring of the label detection channels (plausibility check) is active when the register evaluationi (RC-TINITOK=1) is active.

Label (PM)

1. A PM is recognized in the label window:
   – RC-OUTSWIN = 0
   – RC-FPM = 0
2. No PM is recognized in the label window:
   – RC-OUTSWIN = 1
   – Label detection with the start of the following PF without generation of a gate:
   No label recognized in the PF: RC-FPM = 1
   Label recognized in the PF: RC-FPM = 0, check TP-W again for label.
3. Performance of the register control when RC-OUTSWIN/RC-FPM = 1:
   – The status RC-CSTAT of the register control remains unchanged.
   – Cross-cutter mode (MODE, C1303=0): XRACT = 0, □Xr = 0
   – Insetter mode (MODE, C1303=1): the last valid value of □Xr and XRACT is kept.
4. The register control is continued with the first value actual register value XRACT when RC-OUTSWIN/RC-FPM = 0.

Cylinder pulse (CM)

1. No cylinder pulse is detected over a length of 2*PF, when label pulses are found:
   – RC-FCM = 1. The signal RC-RINITOK is not reset.
2. Performance of the register control when RC-FCM = 1
   – as described under label, item 3 and 4.

Note:

The register control must be re-initialized using RINIT in applications with PF (C1309) □ CF (C1308) after a cylinder label error. (📖 7-28)

Monitoring of the current register difference

The following signals are generated on the basis of the current register difference DXA (DIS:C1375):

Signal				Source		
Name	**Type**	**DIS**	**DIS format**	**CFG**	**List**	**Note**
RC-RSGN	d	-	-	13204	2	Sign register difference 0 = positve, 1 = negative
RC-X0LIM	d	-	-	13205	2	1 = |register difference| > CCX0
RC-X1LIM	d	-	-	13206	2	1 = |register difference| > CCX1
RC-COFFLIM	d	-	-	13207	2	1 = |register difference| > COFF-LIM
RC-MLIM1	d	-	-	13208	2	1 = |register difference| > M-LIM1

Monitoring of the current line speed (master encoder speed)

The following digital signal is generated on the basis of the current line speed:

Signal				Source		
Name	**Type**	**DIS**	**DIS format**	**CFG**	**List**	**Note**
RC-VLIM	d	-	-	13209	2	1 = line speed >= V-LIM

Monitoring of the current contouring error

Code	LCD	Possible settings				IMPORTANT
		Lenze	**Choice**			
C1328	Threshold P21	32768	10	{1 incr}	$18 \cdot 10^8$	Threshold P21 ● Threshold for the generation of a digital signal depending on the current contouring error ● 65536 incr = 1 revolution
C1329	MONIT P21	2	0 Trip 2 Warning 3 Off			Conf. P21 ● Monitoring configuration P21 (contouring error of the FB RC)

Monitoring of speed changes

Signal				Source		
Name	**Type**	**DIS**	**DIS format**	**CFG**	**List**	**Note**
RC-DVLIM	d	-	-	13218	2	Ramp detection (based on master encoder) 1 = switching threshold DVLIM (C1325) reached.

- The sensitivity of the ramp recognition increases with decreasing value of DVLIM (C1325).
- The reaction time of the ramp recognition is more than 0.5 s.

Adjustment on the machine

- Set largest cut format CF (C1308).
- Accelerate machine from zero speed along the desired ramp.
- Reduce value of code DV-LIM (C1325) until the output RC-DVLIM safely switches in the acceleration phase.
- The operating range of this function is within ramp times from 5 to 120 s (0 to 3000 rpm).

7.6.1.16 Control/status word of the register control

Purpose

The control/status word allows the operation of the register control functions via

- LECOM A/B
- parameter channel of INTERBUS
- parameter channel of PROFIBUS
- parameter channel of the system bus (CAN)

Function

- The control word is initialized with 00h after switching on the controller.
- Control word (C0135) and status word (C0150) of the controller remain unchanged.

Control word register control RC-CTRL (C1345)

Bit	Name	OR link with FB input	Status	Function
0	CR-LR	RC-LRSET	0⇨1 0	Set start of coarse register Stop (cancel) set coarse register
1	CR-CON	RC-CON	1 0	Register control on Register control off
2	CR-GCON	RC-GCON	 0 1	Gear control Off On
3	CR-CMODE	RC-CMODE	 0 1	Register control mode: CF-based time-based
4	Free			
5	CR-RINIT	RC-RINIT	0⇨1	Acceptance of label (center window around label)
6	Free		0	
7	CR-DXAEXT	RC-DXAEXT	 0 1	Input of register difference DXA internal external
8	Free			
...				
15	Free			

Status word register control RC-CTRL (C1365)

Bit	Name	Signal status as FB output	Status	Function
0	SR-LROK	RC-LROK	1	Status: Set coarse register completed and CR-LR = 0
1	SR-CSTAT	RC-CSTAT	1 0	Register control is on Register control is off
2	SR-GCSTAT	RC-GCSTAT	0 1	Gear control is off Gear control is on
3	SR-CMSTAT	RC-CMSTAT	0 1	Current register control mode: CF-based time-based
4	SR-RINITOK	RC-RINITOK	0 1	Acceptance of label not carried out carried out and CR-RINIT = 0
5	SR-OUTSWIN	RC-OUTSWIN	0 1	Label within window Label outside window
6	SR-FPM	RC-FPM	0 1	Label pulse OK Errpr label pulse (fault paper mark)
7	SR-FCM	RC-FCM	0 1	Cylinder pulse OK Error cylinder pulse (fault cylinder mark)
8	SR-RSGN	RC-RSGN	0 1	Sign of register difference positive negative
9	SR-X0LIM	RC-X0LIM	1	|register difference| > CCX0
10	SR-X1LIM	RC-X1LIM	1	|register difference| > CCX1
11	SR-COFFLIM	RC-COFFLIM	1	|register difference| > C-OFF-LIM
12	SR-MLIM1	RC-MLIM1	1	|register difference| > M-LIM1
13	SR-VLIM	RC-VLIM	1	Line speed >= V-LIM f. register control on reached
14	SR-TRIMOK	RC-TRIMOK	0 1	Status of phase/length trimming (C1310, C1311) active completed
15	Free			

7.6.1.17 Display codes of function block RC

Format data

Code	LCD	Possible settings				IMPORTANT
		Lenze	Choice			
C1360	DIS: LSF/CF		-21474836.48	{0.01}	21474836.47	Longitudinal shaft format/cut format
C1361	DIS: PF/CF		-21474836.48	{0.01}	21474836.47	Number of sheets

Register control status

Code	LCD	Possible settings				IMPORTANT
		Lenze	Choice			
C1365	RC-STAT		0	{1}	65535	Status word register control

Gearbox factor

Code	LCD	Possible settings				IMPORTANT
		Lenze	Choice			
C1370	DIS: A2*		-2147483648	{1}	2147483647	Gearbox factor A2*
C1371	DIS: B2		-2147483648	{1}	2147483647	Gearbox factor B2

Register Control

Code	LCD	Possible settings				IMPORTANT
		Lenze	Choice			
C1374	DIS: XRACT		-21474836.48	{0.01 mm}	21474836.47	Current actual register in 1/100 mm
C1375	DIS: DXA		-2147483648	{1 mm}	2147483647	Current register error after averaging in 1/100 mm
C1376	DIS: RC-COUT		-2147483648	{1 incr/ms}	2147483647	Register control output in incr./ms
C1377	DIS: RG-CORR		-2147483648	{1}	2147483647	Manipulated variable of the gear control ● Unit: 1/100000 of basic value A2
C1378	DIS: RTR-ACT		-21474836.48	{0.01 mm}	21474836.47	Total of executed register trimmings
C1379	DIS: RTR-RACT		-21474836.48	{0.01 mm}	21474836.47	Momentary value of remaining correction distance afte a RPTRIM input
C1380	DIS: R-XMOFS		-2147483648	{1 incr}	2147483647	Actual register offset in incr.
C1381 1 2 3 4 5 6	 DIS: DXR1 DIS: DXR2 DIS: DXR3 DIS: DXR4 DIS: DXR5 DIS: DXR6		-21474836.48	{0.01 mm}	21474836.47	Register error history
C1382 1 2	 DIS: XP1 DIS: DXP		-2147483648	{1incr}	2147483647	 XP1, current latch value E5 DXP, distance between the last two labels E5
C1383 1 2	 DIS: XQ1 DIS: DXQ		-2147483648	{1 incr}	2147483647	 XQ1, current latch value E4 DXQ, distance between the last two cylinder pulses E4
C1384	DIS: X0-OFFS		-21474836.48	{0.01 mm}	21474836.47	Zero register offset

Note

Extremely different values in DXP (DIS:C1382/2) or DXQ (DIS:C1383/2) may indicate interference pulses or a signal jitter of the label or cylinder sensor.

Remedy:

- Check screening of the signal cables
- Adjust sensor or replace it

Generation of a window

Code	LCD	Possible settings				IMPORTANT
		Lenze	Choice			
C1387	DIS: XMCTR		-21474836.48	{0.01 mm}	21474836.47	Current position of the label referred to window centre

7.6.2 Absolute value generator (ABS)

Purpose

This FB is used to convert bipolar signals into unipolar signals.

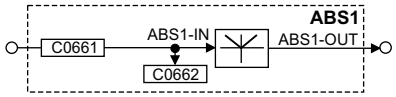

Fig. 7-24 Absolute value generator (ABS1)

Signal				Source			Note
Name	Type	DIS	DIS format	CFG	List	Lenze	
ABS1-IN1	a	C0662	dec [%]	C0661	1	1000	-
ABS1-OUT	a	-	-	-	-	-	-

Function

The absolute value of the input signal is generated.

7.6.3 Addition block (ADD)

Purpose

Adds or subtracts ”analog” signals depending on the input used.

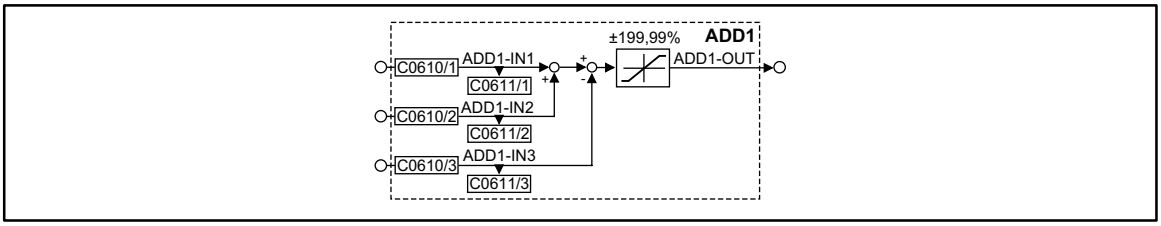

Fig. 7-25 Addition block (ADD1)

Signal				Source			Note
Name	Type	DIS	DIS format	CFG	List	Lenze	
ADD1-IN1	a	C0611/1	dec [%]	C0610/1	1	1000	Addition input
ADD1-IN2	a	C0611/2	dec [%]	C0610/2	1	1000	Addition input
ADD1-IN3	a	C0611/3	dec [%]	C0610/3	1	1000	Subtraction input
ADD1-OUT	a	-	-	-	-	-	limited to ±199.99%

Function

- Input ADD1-IN1 is added to input ADD1-IN2.
- The input ADD-IN3 is subtracted from the calculated result.
- The result of the subtraction is then limited to ±199.99 %.

7.6.4 Automation interface (AIF-IN)

Purpose

Interface for input signals from the connected field bus module (e.g. Interbus-S, Profibus-DP) for setpoints and actual values as binary, analog or phase information. Please observe the corresponding Operating Instructions of the connected field bus module.

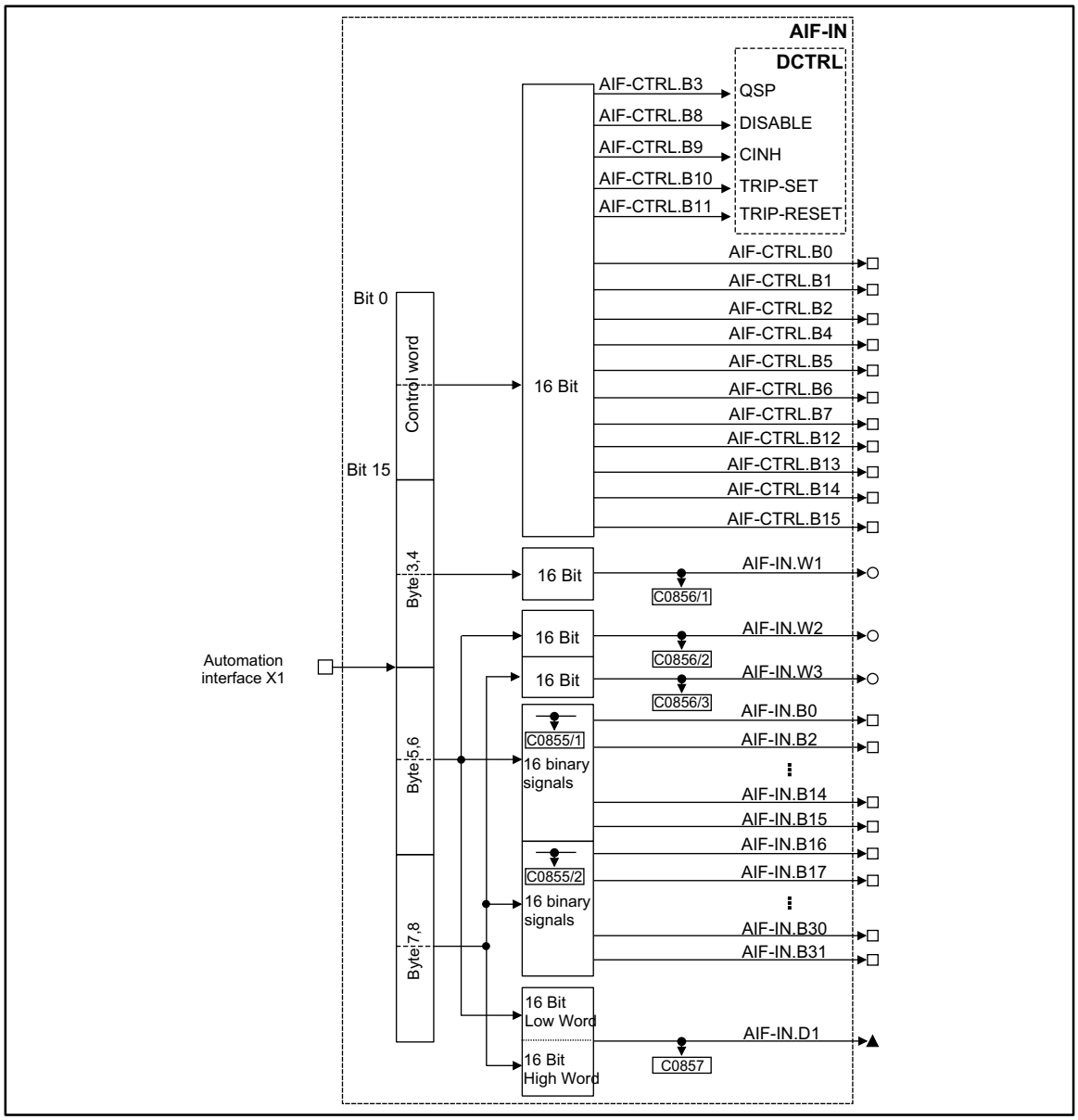

Fig. 7-26 Function block AIF-IN

Function block library

Signal				Source			Note
Name	Type	DIS	DIS format	CFG	List	Lenze	
AIF-CTRL.B0	d	-	-	-	-	-	
AIF-CTRL.B1	d	-	-	-	-	-	
AIF-CTRL.B2	d	-	-	-	-	-	
AIF-CTRL.B4	d	-	-	-	-	-	
AIF-CTRL.B5	d	-	-	-	-	-	
AIF-CTRL.B6	d	-	-	-	-	-	
AIF-CTRL.B7	d	-	-	-	-	-	
AIF-CTRL.B12	d	-	-	-	-	-	
AIF-CTRL.B13	d	-	-	-	-	-	
AIF-CTRL.B14	d	-	-	-	-	-	
AIF-CTRL.B15	d	-	-	-	-	-	
AIF-IN.W1	a	C0856/1	dec [%]	-	-	-	+16384 = +100%
AIF-IN.W2	a	C0856/2	dec [%]	-	-	-	+16384 = +100%
AIF-IN.W3	a	C0856/3	dec [%]	-	-	-	+16384 = +100%
AIF-IN.D1	ph	C0857	dec [inc]	-	-	-	65536 = 1 revolution
AIF-IN.B0	d	C0855/1	hex	-	-	-	
AIF-IN.B1	d	C0855/1	hex	-	-	-	
AIF-IN.B2	d	C0855/1	hex	-	-	-	
AIF-IN.B3	d	C0855/1	hex	-	-	-	
AIF-IN.B4	d	C0855/1	hex	-	-	-	
AIF-IN.B5	d	C0855/1	hex	-	-	-	
AIF-IN.B6	d	C0855/1	hex	-	-	-	
AIF-IN.B7	d	C0855/1	hex	-	-	-	
AIF-IN.B8	d	C0855/1	hex	-	-	-	
AIF-IN.B9	d	C0855/1	hex	-	-	-	
AIF-IN.B10	d	C0855/1	hex	-	-	-	
AIF-IN.B11	d	C0855/1	hex	-	-	-	
AIF-IN.B12	d	C0855/1	hex	-	-	-	
AIF-IN.B13	d	C0855/1	hex	-	-	-	
AIF-IN.B14	d	C0855/1	hex	-	-	-	
AIF-IN.B15	d	C0855/1	hex	-	-	-	
AIF-IN.B16	d	C0855/2	hex	-	-	-	
AIF-IN.B17	d	C0855/2	hex	-	-	-	
AIF-IN.B18	d	C0855/2	hex	-	-	-	
AIF-IN.B19	d	C0855/2	hex	-	-	-	
AIF-IN.B20	d	C0855/2	hex	-	-	-	
AIF-IN.B21	d	C0855/2	hex	-	-	-	
AIF-IN.B22	d	C0855/2	hex	-	-	-	
AIF-IN.B23	d	C0855/2	hex	-	-	-	
AIF-IN.B24	d	C0855/2	hex	-	-	-	
AIF-IN.B25	d	C0855/2	hex	-	-	-	
AIF-IN.B26	d	C0855/2	hex	-	-	-	
AIF-IN.B27	d	C0855/2	hex	-	-	-	
AIF-IN.B28	d	C0855/2	hex	-	-	-	
AIF-IN.B29	d	C0855/2	hex	-	-	-	
AIF-IN.B30	d	C0855/2	hex	-	-	-	
AIF-IN.B31	d	C0855/2	hex	-	-	-	

Function

The input signals of the 8 byte user data of the AIF object are converted into corresponding signal types. The signals can be used via further function blocks.

Byte 1 and 2

Byte 1 and 2 form the control word for the controller. The bits 3, 8, 9, 10, and 11 of these bytes are directly transferred to the function block DCTRL where they are linked to other signals. The other 11 bits can be used to control further function blocks.

Byte 3 and 4

form the signal to AIF-IN.W1.

Byte 5, 6, 7 and 8

The meaning of these user data can be selected among different signal types. Depending on the requirement, these data can be evaluated as up to 2 analog signals, 32 digital signals or one phase signal. Mixed forms are also possible.

7.6.5 Automation interface (AIF-OUT)

Purpose

Interface for output signals from the connected field bus module (e.g. Interbus-S, Profibus-DP) for setpoints and actual values as binary, analog or phase information. Please observe the corresponding Operating Instructions of the connected field bus module.

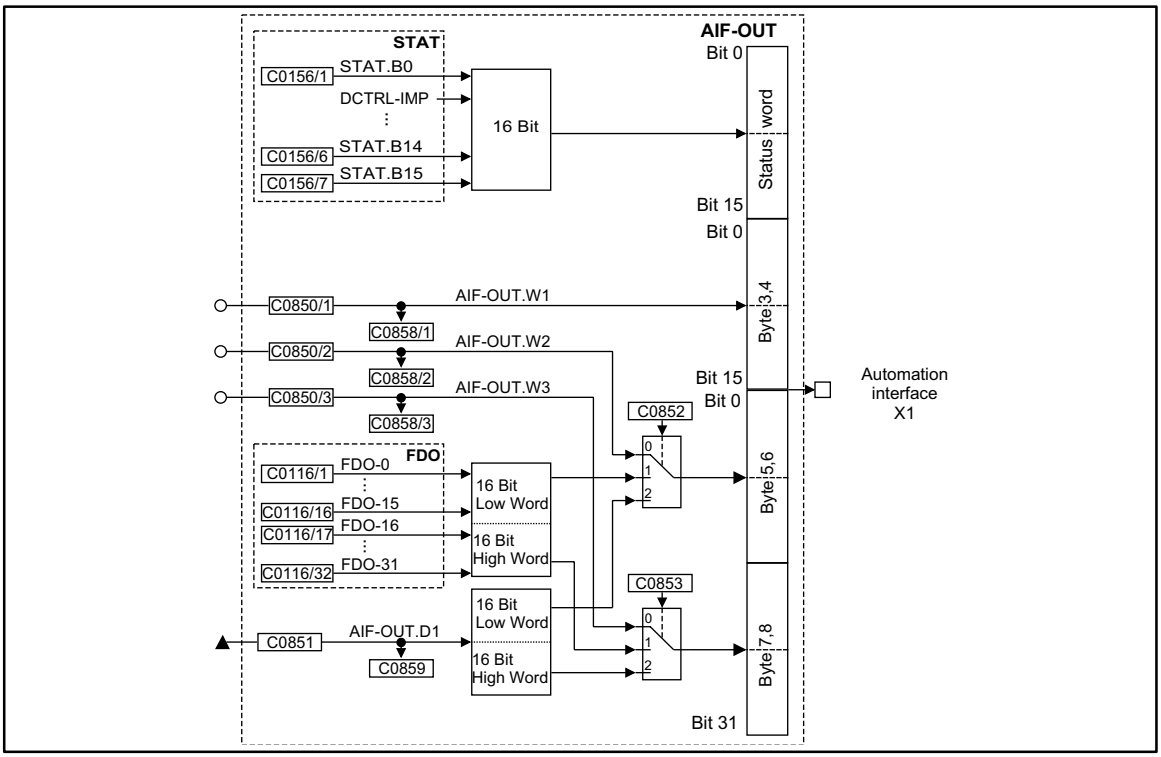

Fig. 7-27 Function block AIF-OUT

Signal				Source			Note
Name	Type	DIS	DIS format	CFG	List	Lenze	
AIF-OUT.W1	a	C0858/1	dec [%]	C0850/1	1	1000	+100% = +16384
AIF-OUT.W2	a	C0858/2	dec [%]	C0850/2	1	1000	+100% = +16384
AIF-OUT.W3	a	C0858/3	dec [%]	C0850/3	1	1000	+100% = +16384
AIF-OUT.D1	ph	C0859	abs [inc]	C0851	4	1000	1 revolution = 65536

Function

The input signals of this function block are copied to the 8 byte user data of the AIF object and laid on the connected fieldbus module. The meaning of the user data can be determined very easily with C0852 and C0853 and the corresponding configuration code (CFG).

Byte 1 and 2

Here, the status word of the function block STAT is mapped. Some of the bits are freely assignable (see description function block STAT in chapter 7.6.51)

Byte 3 and 4

Here, the analog signal configured at the input AIF-OUT.W1 is mapped.

Byte 5, 6, 7 and 8

The meaning of these user data can be selected among different signal types. Depending on the requirement, up to two analog signals, 32 digital signals of the function block FDO or a phase signal can be selected. Mixed forms are also possible.

Example

16 digital signals of FDO and the LOW-WORD of AIF-OUT.D1 are to be output:

- The LOW-WORD of AIF-OUT.D1 can only be output on byte 5 and 6.
  – For this, set C0852 = 2 and assign a phase signal source under configuration code C0851.
- For the digital signals, the bits 16 - 31 (byte 7 and 8) are available, since on the bytes 5 and 6 either the LOW-WORD of AIF-OUT.D1 or the bits 0 to 15 of FDO can be output:
  – C0853 = 1 assigns the bits 16 - 31 of FDO to the bytes 7 and 8.

7.6.6 Analog input via terminal 1,2/3,4 (AIN)

Purpose

This FB is the interface for analog signals as

- setpoint input,
- actual value input and
- parameter control.

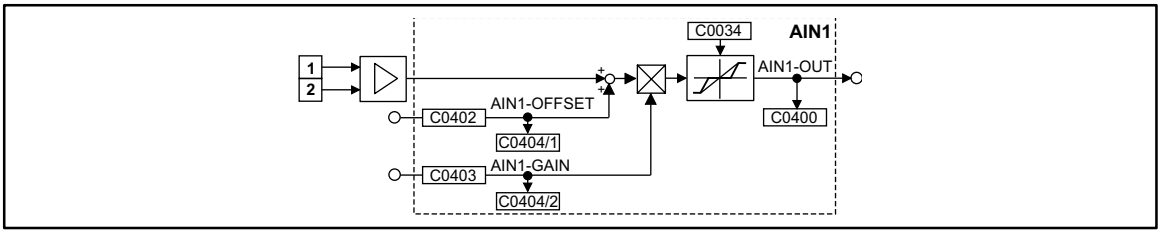

Fig. 7-28 Analog input via terminal 1,2 (AIN1)

Signal				Source			Note
Name	Type	DIS	DIS format	CFG	List	Lenze	
AIN1-OFFSET	a	C0404/1	dec [%]	C0402	1	19502	-
AIN1-GAIN	a	C0404/2	dec [%]	C0403	1	19504	-
AIN1-OUT	a	-	-	-	-	-	-

Special feature of input terminals 1,2

- A dead band element can be integrated into the output signal at AIN1 via code C0034. The function 4 ... 20 mA as a current master value can be achieved together with the jumper setting X2 (controller front).
- The signal is read cyclically (1 ms).

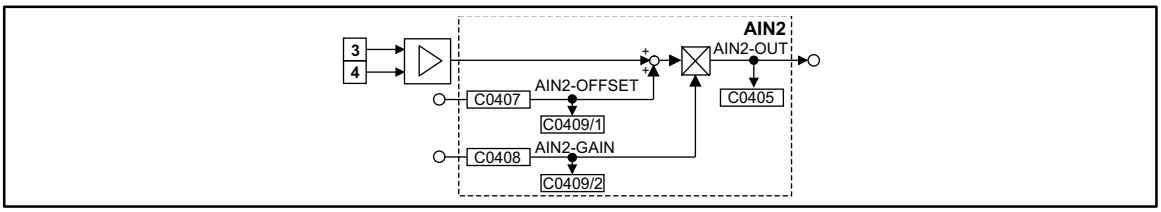

Fig. 7-29 Analog input via terminal 3, 4 (AIN2)

Special feature of AIN2

- The signal is read cyclically every 250 µs .

Signal				Source			Note
Name	Type	DIS	DIS format	CFG	List	Lenze	
AIN2-OFFSET	a	C0409/1	dec [%]	C0407	1	19503	-
AIN2-GAIN	a	C0409/2	dec [%]	C0408	1	19505	-
AIN2-OUT	a	-	-	-	-	-	-

Function

- The analog input value is added to the value at input AINx-OFFSET.
- The result of the addition is limited to ±200%.
- The limited value is multiplied with the value which is applied at input AINx-GAIN.
- The signal is then limited to ±200%.
- The signal is output at AINx-OUT.

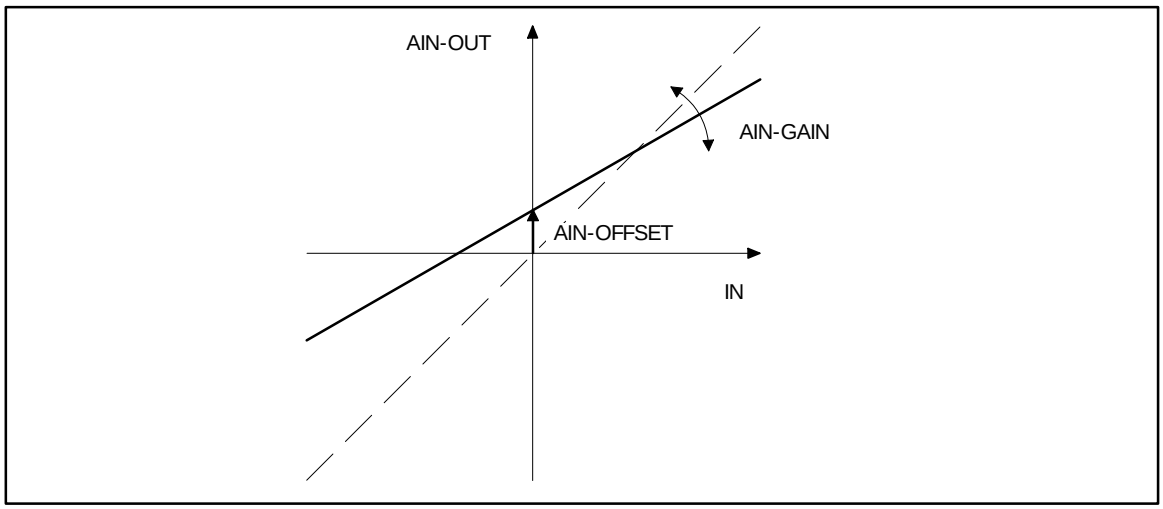

Fig. 7-30 Offset and gain of the analog input

7.6.7 AND link (AND)

Purpose

This function is used to link digital signals as an AND function. These operations can be used for the control of functions or the generation of status information.

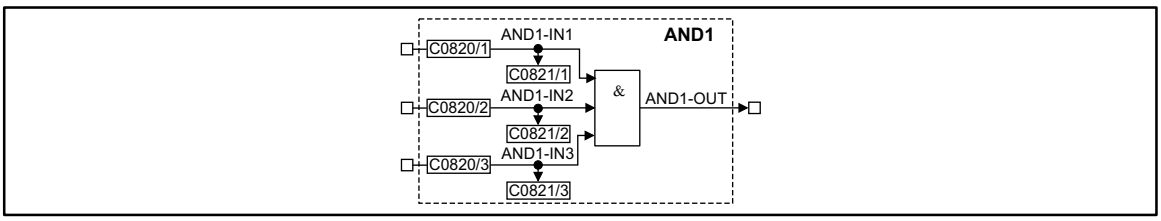

Fig. 7-31 AND function (AND1)

Signal				Source			Note
Name	Type	DIS	DIS format	CFG	List	Lenze	
AND1-IN1	d	C0821/1	bin	C0820/1	2	1000	-
AND1-IN2	d	C0821/2	bin	C0820/2	2	1000	-
AND1-IN3	d	C0821/3	bin	C0820/3	2	1000	-
AND1-OUT	d	-	-	-	-	-	-

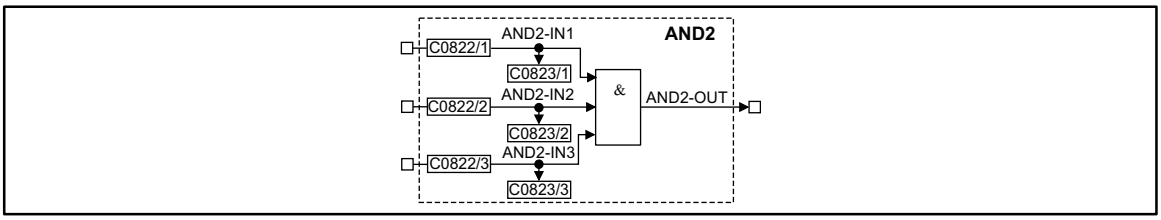

Fig. 7-32 AND function (AND2)

Signal				Source			Note
Name	Type	DIS	DIS format	CFG	List	Lenze	
AND2-IN1	d	C0823/1	bin	C0822/1	2	1000	-
AND2-IN2	d	C0823/2	bin	C0822/2	2	1000	-
AND2-IN3	d	C0823/3	bin	C0822/3	2	1000	-
AND2-OUT	d	-	-	-	-	-	-

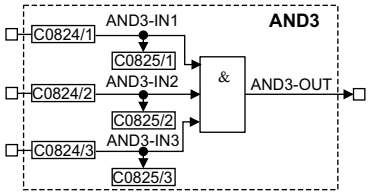

Fig. 7-33 AND function (AND3)

Signal				Source			Note
Name	Type	DIS	DIS format	CFG	List	Lenze	
AND3-IN1	d	C0825/1	bin	C0824/1	2	1000	-
AND3-IN2	d	C0825/2	bin	C0824/2	2	1000	-
AND3-IN3	d	C0825/3	bin	C0824/3	2	1000	-
AND3-OUT	d	-	-	-	-	-	-

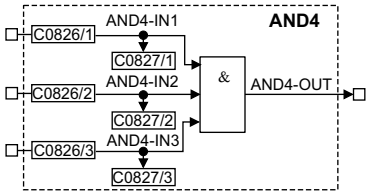

Fig. 7-34 AND function (AND4)

Signal				Source			Note
Name	Type	DIS	DIS format	CFG	List	Lenze	
AND4-IN1	d	C0827/1	bin	C0826/1	2	1000	-
AND4-IN2	d	C0827/2	bin	C0826/2	2	1000	-
AND4-IN3	d	C0827/3	bin	C0826/3	2	1000	-
AND4-OUT	d	-	-	-	-	-	-

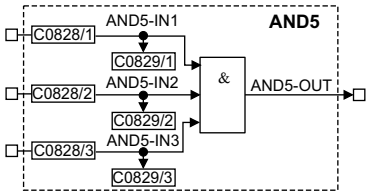

Fig. 7-35 AND function (AND5)

Signal				Source			Note
Name	Type	DIS	DIS format	CFG	List	Lenze	
AND5-IN1	d	C0829/1	bin	C0828/1	2	1000	-
AND5-IN2	d	C0829/2	bin	C0828/2	2	1000	-
AND5-IN3	d	C0829/3	bin	C0828/3	2	1000	-
AND5-OUT	d	-	-	-	-	-	-

Function

ANDx-IN1	ANDx-IN2	ANDx-IN3	ANDx-OUT
0	0	0	0
1	0	0	0
0	1	0	0
1	1	0	0
0	0	1	0
1	0	1	0
0	1	1	0
1	1	1	1

The function corresponds to a series connection of normally-open contacts in a contactor control.

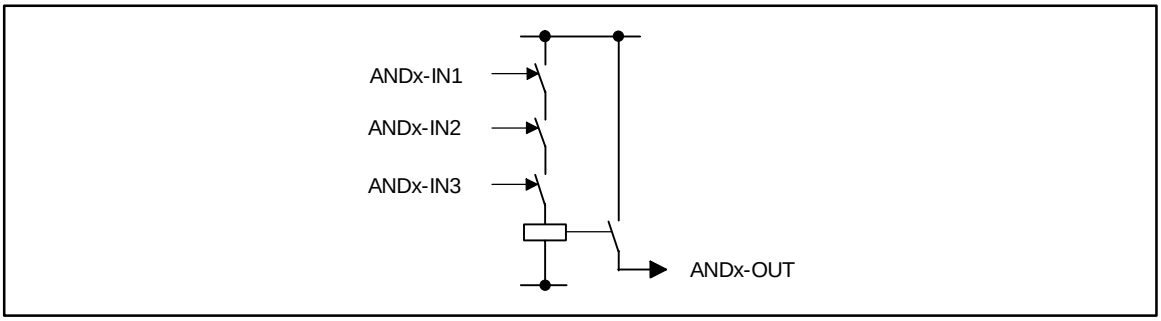

Fig. 7-36 AND function as a series connection of normally-open contacts

Tip!

If only two inputs are required, use the inputs ANDx-IN1 and ANDx-IN2. Assign the input ANDx-IN3 to the signal source FIXED1 via the configuration code.

7.6.8 Inverter (ANEG)

Purpose

This FB inverts the sign of an analog signal.

Two inverters are available:

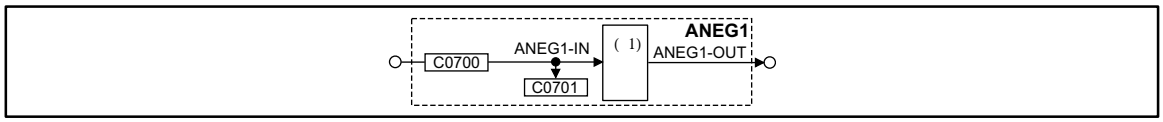

Fig. 7-37 Inverter (ANEG1)

Signal				Source			Note
Name	Type	DIS	DIS format	CFG	List	Lenze	
ANEG1-IN	a	C0701	dec [%]	C0700	1	19523	-
ANEG1-OUT	a	-	-	-	-	-	-

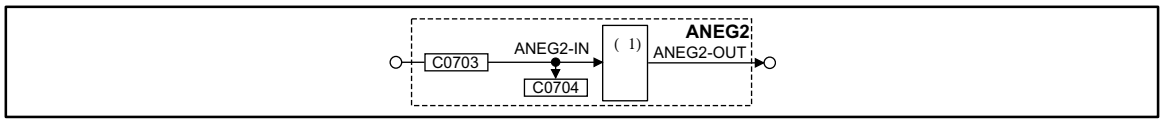

Fig. 7-38 Inverter (ANEG2)

Signal				Source			Note
Name	Type	DIS	DIS format	CFG	List	Lenze	
ANEG2-IN	a	C0704	dec [%]	C0703	1	1000	-
ANEG2-OUT	a	-	-	-	-	-	-

Function

The input value is multiplied with -1 and then output again.

7.6.9 Analog output via terminal 62/63 (AOUT)

Purpose

AOUT1 and AOUT2 can be used as monitor outputs.

Internal analog signals can be output as voltage signals and be used e.g. as display values or setpoints for slaves.

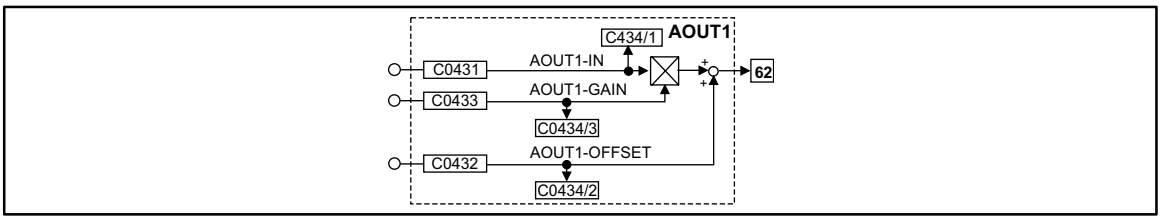

Fig. 7-39 Analog output via terminal X6/62 (AOUT1)

Signal				Source			Note
Name	Type	DIS	DIS format	CFG	List	Lenze	
AOUT1-IN	a	C0434/1	dec [%]	C0431	1	5001	-
AOUT1-GAIN	a	C0434/3	dec [%]	C0433	1	19510	-
AOUT1-OFFSET	a	C0434/2	dec [%]	C0432	1	19512	-

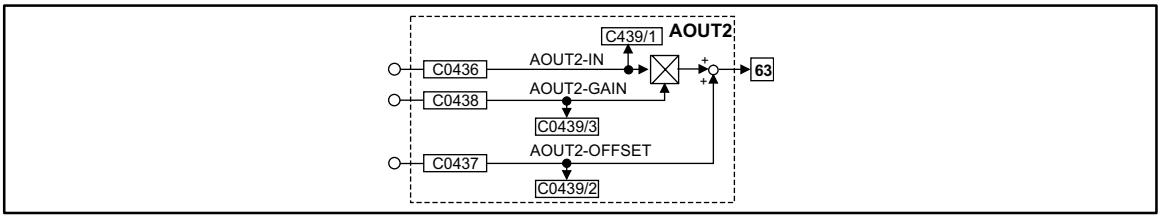

Fig. 7-40 Analog output via terminal X6/63 (AOUT2)

Signal				Source			Note
Name	Type	DIS	DIS format	CFG	List	Lenze	
AOUT2-IN	a	C0439/1	dec [%]	C0436	1	5002	-
AOUT2-GAIN	a	C0439/3	dec [%]	C0438	1	19511	-
AOUT2-OFFSET	a	C0439/2	dec [%]	C0437	1	19513	-

Function

- The value at input AOUTx-IN is multiplied with the value at input AOUTx-GAIN.
  – The formula for the multiplication is: 100% * 100% = 100%.
- The result of the multiplication is limited to ±200%.
- The limited value is added to the value which is applied at input AOUTx-OFFSET.
  – The formula for the addition is 50% + 10% = 60%. The result of the calculation is mapped in such a way that 100% = 10 V.
- The result of the addition is limited again to ±200%.
- The result of the calculation is mapped in such a way that 100% = 10 V and is output as a signal at terminal 62 or 63.

Example for an output value

AOUT1-IN = 50%, AOUT1-GAIN = 100%, AOUT1-OFFSET = 10%

Output terminal 62 = ((50% * 100% = 50%) + 10% = 60%) = 6 V

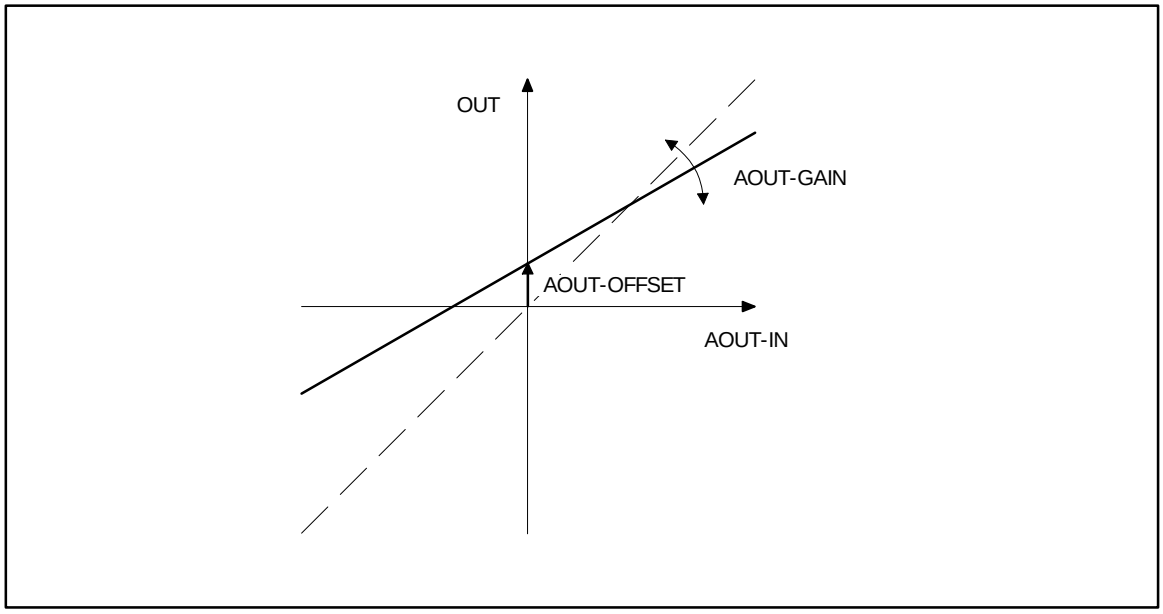

Fig. 7-41 Offset and gain of the analog output

7.6.10 Arithmetic block (ARIT)

Purpose

Logic operation of two ”analog” signals.

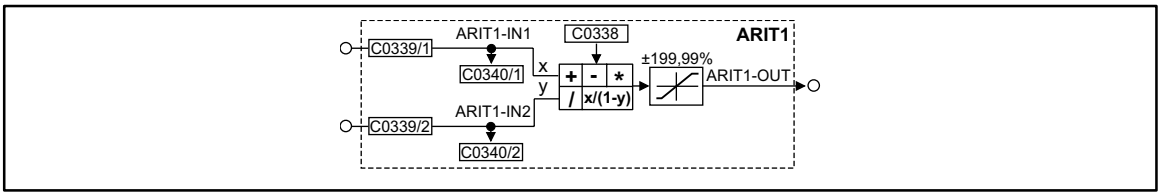

Fig. 7-42 Arithmetic block (ARIT1)

Signal				Source			Note
Name	Type	DIS	DIS format	CFG	List	Lenze	
ARIT1-IN1	a	C0340/1	dec [%]	C0339/1	1	1000	-
ARIT1-IN2	a	C0340/2	dec [%]	C0339/2	1	1000	-
ARIT1-OUT	a	-	-	-	-	-	limited to ±199.99 %

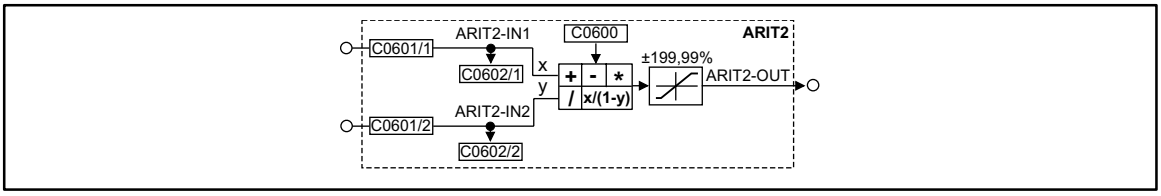

Fig. 7-43 Arithmetic block (ARIT2)

Signal				Source			Note
Name	Type	DIS	DIS format	CFG	List	Lenze	
ARIT2-IN1	a	C0602/1	dec [%]	C0601/1	1	1000	-
ARIT2-IN2	a	C0602/2	dec [%]	C0601/2	1	1000	-
ARIT2-OUT	a	-	-	-	-	-	limited to ±199.99 %

Function

For both arithmetic blocks the following functions can be selected (example for ARIT1):

- C0338 = 0
  – Output = ARIT1-IN1
  – ARIT1-IN2 is not processed
- C0338 = 1
  – Output = ARIT1-IN1 + ARIT1-IN2
  – Example: 100% = 50% + 50%
- C0338 = 2
  – Output = ARIT1-IN1 - ARIT1-IN2
  – Example: 50% = 100% - 50%
- C0338 = 3
  – Output = ARIT1-IN1 * ARIT1-IN2
  – Example: 100% = 100% * 100%

Function block library

- C0338 = 4
  – Output = ARIT1-IN1 / |ARIT1-IN2|
  – Example: 1% = 100% / 100%
- C0338 = 5
  – Output = ARIT1-IN1 / (100% - ARIT1-IN2)
  – Example: 200% = 100% /(100% - 50%)

7.6.11 Arithmetic block (ARITPH)

Purpose

The FB ARITPH calculates a phase output signal from two phase input signals.

ARITPH1

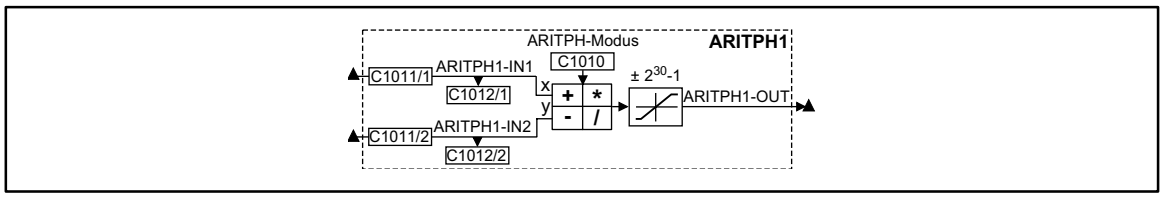

Fig. 7-44 Function block ARITPH1

Signal				Source		Note
Name	Type	DIS	DIS format	CFG	List	
ARITPH1-IN1	ph	C1012/1	dec [inc]	C1011/1	3	-
ARITPH1-IN2	ph	C1012/2	dec [inc]	C1011/2	3	-
ARITPH1-OUT	ph	-	-	-	-	

Function

- Selection of the arithmetic function with the code ARITPH mode.
- The function block limits the result (see table)

ARITPH mode	Arithmetic function	Limitation	
C1010=0	OUT = IN1	2^{30} -1	
C1010=1	OUT = IN1 + IN2	2^{30} -1	
C1010=2	OUT = IN1 - IN2	2^{30} -1	
C1010=3	OUT = (IN1 * IN2) / 2^{31}	2^{30} -1	(remainder not considered)
C1010=11	OUT = IN1 + IN2	without	with overflow
C1010=12	OUT = IN1 - IN2	without	with overflow
C1010=13	OUT = IN1 * IN2	2^{31}	
C1010=14	OUT = IN1 / IN2	2^{30} -1	(remainder not considered)

- The calculation is performed cyclically in the control program.

7.6.12 Changeover switch for analog signals (ASW)

Purpose

This FB changes between two analog signals.

Therefore, it is possible to change e.g. during winding between an initial diameter and a calculated diameter.

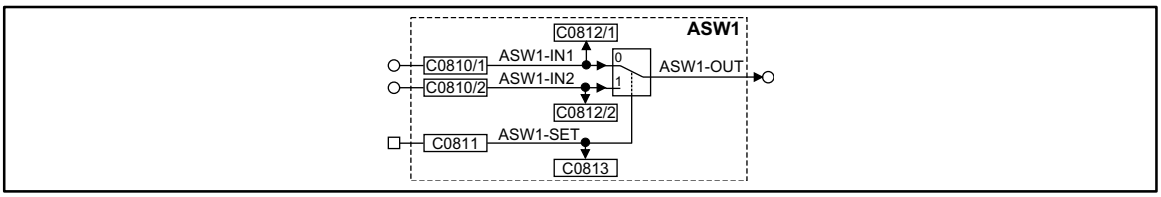

Fig. 7-45 Changeover switch for analog signals (ASW1)

Signal				Source			Note
Name	Type	DIS	DIS format	CFG	List	Lenze	
ASW1-IN1	a	C0812/1	dec [%]	C0810/1	1	55	-
ASW1-IN2	a	C0812/2	dec [%]	C0810/2	1	1000	-
ASW1-SET	d	C0813	bin	C0811	2	1000	-
ASW1-OUT	a	-	-	-	-	-	-

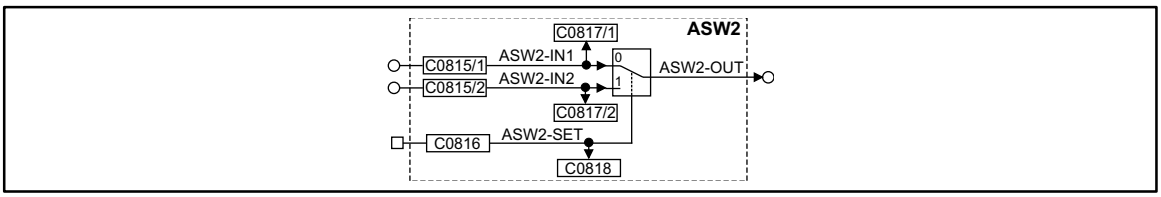

Fig. 7-46 Changeover switch for analog signals (ASW2)

Signal				Source			Note
Name	Type	DIS	DIS format	CFG	List	Lenze	
ASW2-IN2	a	C0817/1	dec [%]	C0815/1	1	1000	-
ASW2-IN1	a	C0817/2	dec [%]	C0815/2	1	1000	-
ASW2-SET	d	C0818	bin	C0816	2	1000	-
ASW2-OUT	a	-	-	-	-	-	-

Function

This FB is controlled via a binary input. Depending on the input signal, different signals are sent to the output:

- If a HIGH signal is applied at the binary input, the signal which is applied at the ASWx-IN2 input is sent to the output.
- If a LOW signal is applied, the signal which is applied at the ASW-IN2 input is sent to the output.

7.6.13 Holding brake (BRK)

Purpose

The FB is used to trigger a holding brake.

Possible applications:

- Hoists
- Traversing drives
- Active loads

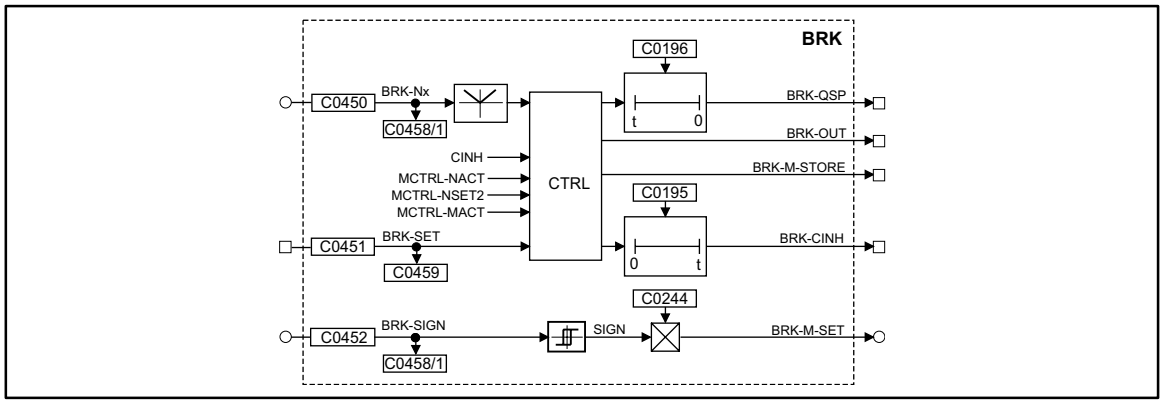

Fig. 7-47 Holding brake (BRK)

Signal				Source			Note
Name	Type	DIS	DIS format	CFG	List	Lenze	
BRK-SET	d	C0459	bin	C0451	2	1000	-
BRK-NX	a	C0458/1	dec [%]	C0450	1	1000	Speed threshold from which the drive can output the signal "close brake". The signal source for this input can be a control code, a fixed value or any other analog output of a FB.
BRK-SIGN	a	C0458/2	dec [%]	C0452	1	1000	Direction of the torque, with which the drive has to build a torque against the brake.The signal source for this input can be a control code, a fixed value or any other analog output of a FB.
BRK-M-SET	a	-	dec [%]	C0244	-	0.00	Holding torque of the DC injection brake 100% = value of C0057
BRK-T-ACT	a	-	dec	C0195	-	99.9	Brake-close time
BRK-T-RELEASE	a	-	dec	C0196	-	0.0	Brake-open time

Function

The signals N-ACT, M-ACT, N-SET and BRK-Nx are processed as absolute values within the function block.

7.6.13.1 Close brake

Purpose

A HIGH signal at the BRK-SET input activates the function. The BRK-QSP output changes to HIGH at the same time. This signal can be used to decelerate the drive to zero speed via a deceleration ramp.

Function

If the setpoint speed falls below the speed set at the BRK-Nx input, the BRK-OUT output is set to HIGH. To obtain protection against open circuit, this signal must be inverted at the output (e.g. under C0118).

When the BRK-OUT is set, a time element is triggered. After the time set under C0195 has elapsed, the BRK-RSP output is set. Using this output, for instance, the controller inhibit (inside the controller) can be set. In general, the brake-close time is set here. This is necessary because the brake does not close immediately after the activation of the BRK-OUT signal and thus the drive does not provide a holding torque for the time set.

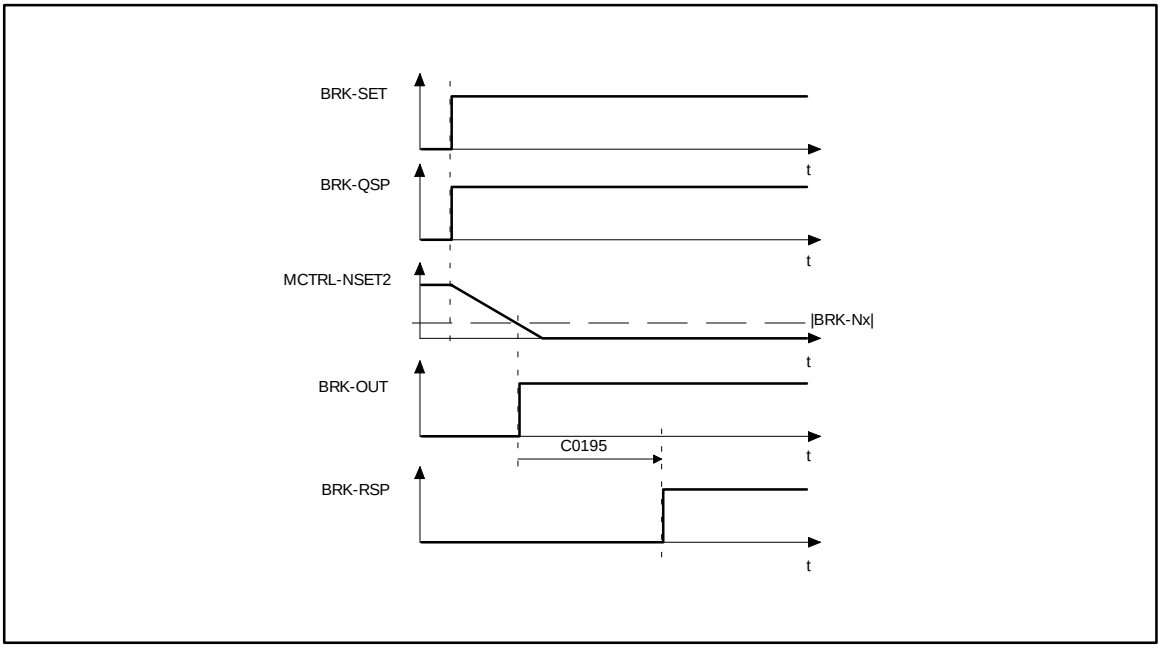

Fig. 7-48 Signal sequence when the brake is closed

7.6.13.2 Open brake

Purpose

The LOW signal at the BRK-SET input sets the BRK-CINH immediately to LOW. The BRK-M-STORE output is set to HIGH at the same time. This signal initiates the generation of a defined brake torque against the brake. The drive thus takes up the torque while the brake opens. The signal is reset only after the time set under C0196 has elapsed.

Function

The BRK-OUT output signal is set to LOW as soon as the torque reaches the value set under C0244 (holding torque).

When the input is reset, a time element is triggered. After the time set under C0196 has elapsed, the BRK-QSP output is reset. With this signal, the setpoint integrator can be enabled after the brake-open time has elapsed, for instance.

Note

If an actual speed larger than the value at BRK-Nx is detected before the brake-open time (C0196) has elapsed, the BRK-QSP and BRK-M-STORE signals are immediately reset. The drive can immediately operate speed- or phase controlled. If the BRK-QSP output acts on the QSP control word, the drive synchronizes to the actual speed and follows its setpoint.

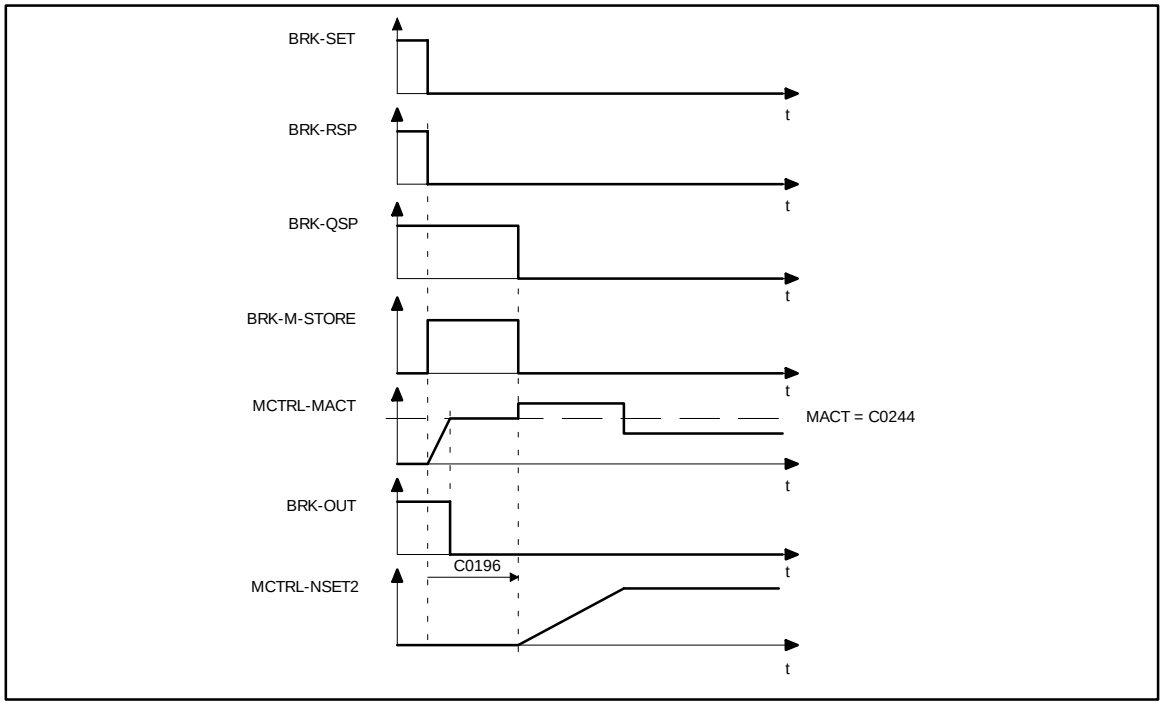

Fig. 7-49 Signal sequence when the brake is opened (released)

7.6.13.3 Setting controller inhibit

Purpose

Controller inhhibit can be set e.g. in case of an interference (LU, OU, □).

Function

When controller inhibit (CINH) is set, the BRK-OUT signal is immediately set to HIGH. The drive is then braked by its mechanical brake.

If the fault is eliminated quickly, i.e. if the controller inhibit (CINH) is reset before the actual speed falls below the threshold BRK-Nx, the BRK-OUT signal is immediately set to LOW. The drive synchronizes itself to the momentary speed and follows its setpoint.

If the value falls below the threshold, the drive starts as described under ”Open brake”.

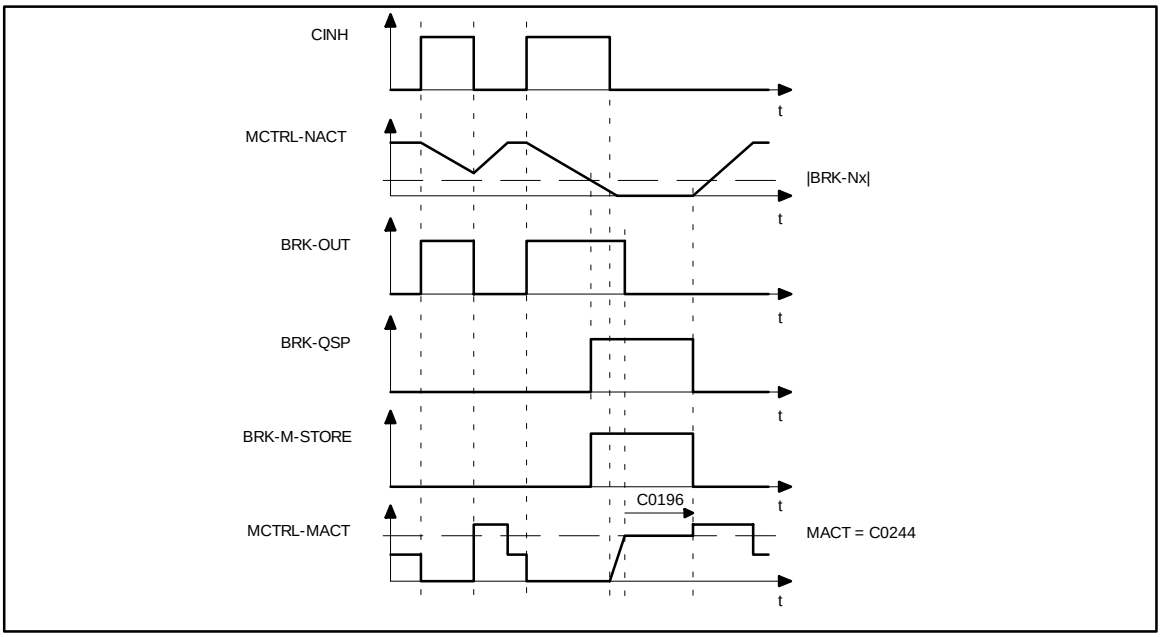

Fig. 7-50 Control brake by CINH

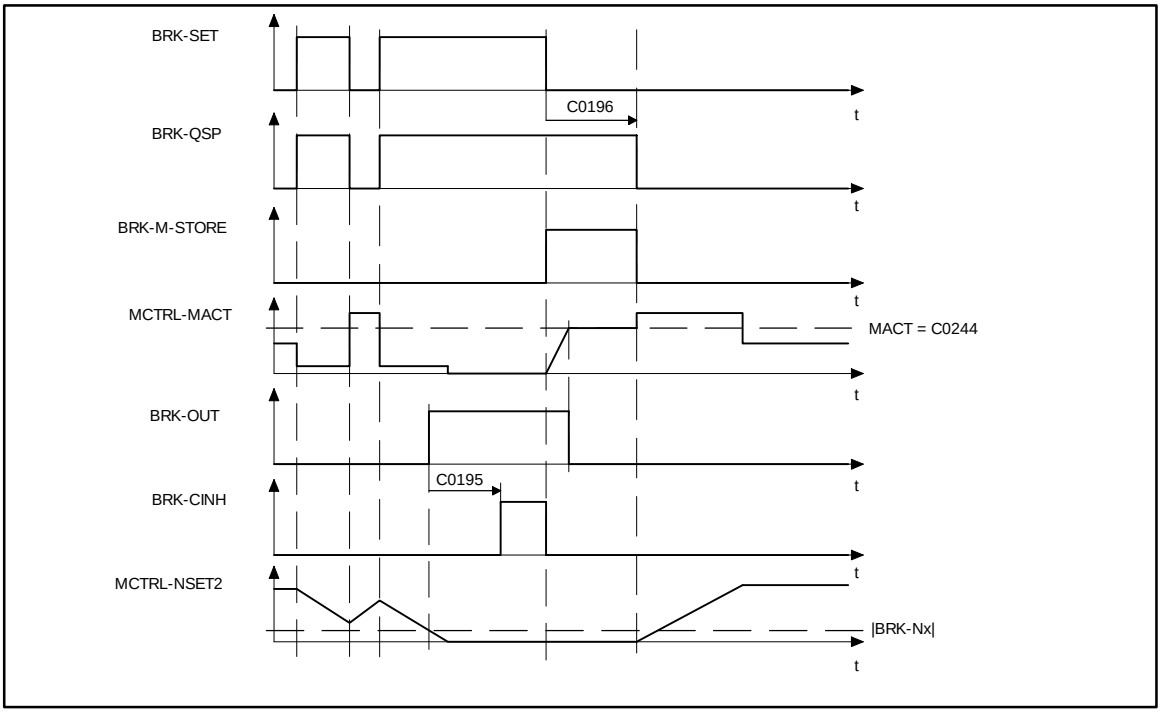

Fig. 7-51 Switching cycle when braking

7.6.14 System bus (CAN-IN)

Purpose

Interface for input signals from the system bus for setpoints and actual values as binary, analog, or phase information.

CAN-IN1

The process data object CAN-IN1 is provided for the cyclic transmission of process data and the communication with a superimposed master.

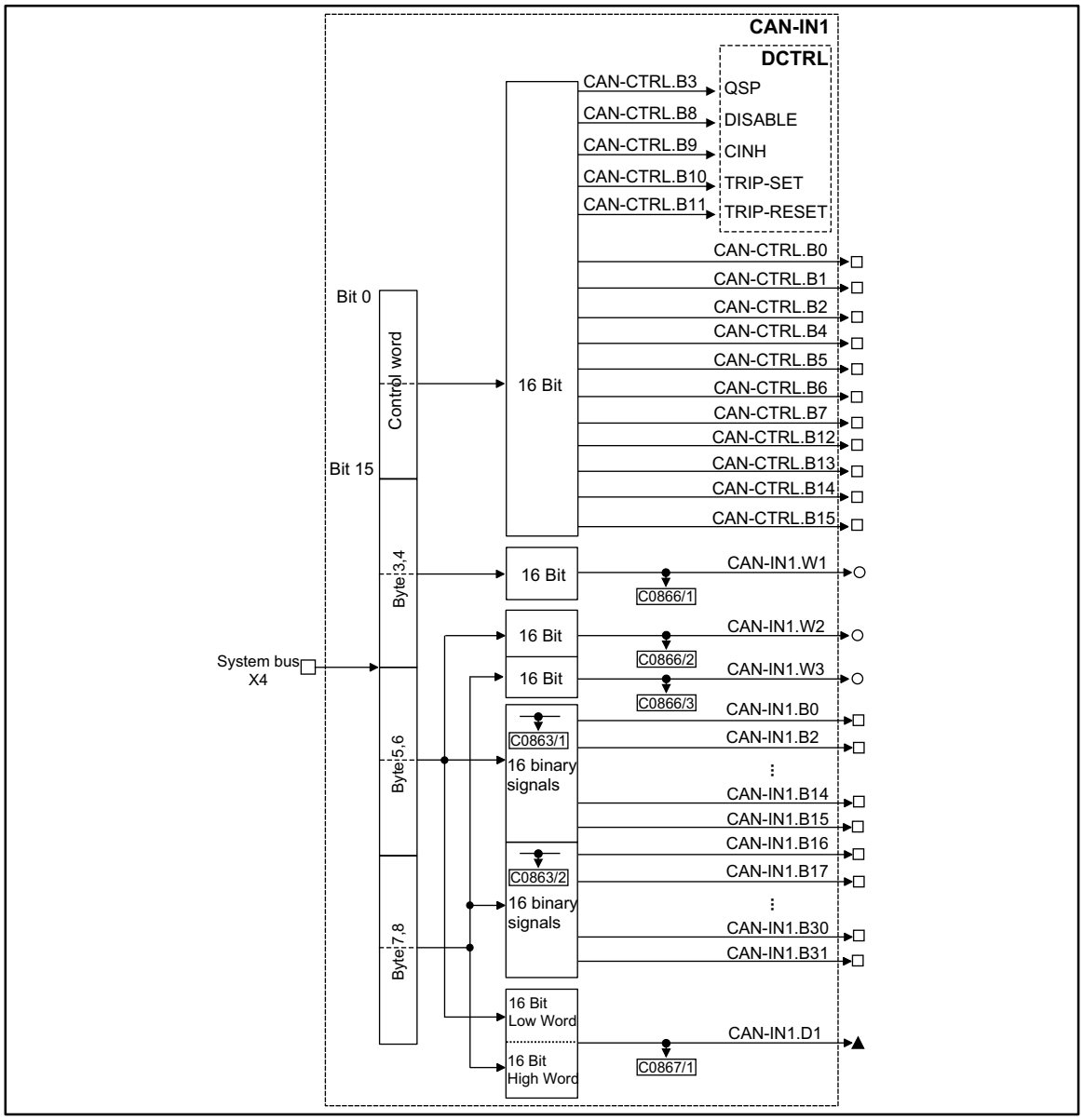

Fig. 7-52 Function block CAN-IN1

Function block library

Signal				Source			Note
Name	Type	DIS	DIS format	CFG	List	Lenze	
CAN-CTRL.B0	d	-	-	-	-	-	
CAN-CTRL.B1	d	-	-	-	-	-	
CAN-CTRL.B2	d	-	-	-	-	-	
CAN-CTRL.B4	d	-	-	-	-	-	
CAN-CTRL.B5	d	-	-	-	-	-	
CAN-CTRL.B6	d	-	-	-	-	-	
CAN-CTRL.B7	d	-	-	-	-	-	
CAN-CTRL.B12	d	-	-	-	-	-	
CAN-CTRL.B13	d	-	-	-	-	-	
CAN-CTRL.B14	d	-	-	-	-	-	
CAN-CTRL.B15	d	-	-	-	-	-	
CAN-IN1.W1	a	C0866/1	dec [%]	-	-	-	+16384 = +100%
CAN-IN1.W2	a	C0866/2	dec [%]	-	-	-	+16384 = +100%
CAN-IN1.W3	a	C0866/3	dec [%]	-	-	-	+16384 = +100%
CAN-IN1.D1	ph	C0867/1	dec [inc]	-	-	-	65536 = 1 revolution
CAN-IN1.B0	d	C0863/1	hex	-	-	-	
CAN-IN1.B1	d	C0863/1	hex	-	-	-	
CAN-IN1.B2	d	C0863/1	hex	-	-	-	
CAN-IN1.B3	d	C0863/1	hex	-	-	-	
CAN-IN1.B4	d	C0863/1	hex	-	-	-	
CAN-IN1.B5	d	C0863/1	hex	-	-	-	
CAN-IN1.B6	d	C0863/1	hex	-	-	-	
CAN-IN1.B7	d	C0863/1	hex	-	-	-	
CAN-IN1.B8	d	C0863/1	hex	-	-	-	
CAN-IN1.B9	d	C0863/1	hex	-	-	-	
CAN-IN1.B10	d	C0863/1	hex	-	-	-	
CAN-IN1.B11	d	C0863/1	hex	-	-	-	
CAN-IN1.B12	d	C0863/1	hex	-	-	-	
CAN-IN1.B13	d	C0863/1	hex	-	-	-	
CAN-IN1.B14	d	C0863/1	hex	-	-	-	
CAN-IN1.B15	d	C0863/1	hex	-	-	-	
CAN-IN1.B16	d	C0863/2	hex	-	-	-	
CAN-IN1.B17	d	C0863/2	hex	-	-	-	
CAN-IN1.B18	d	C0863/2	hex	-	-	-	
CAN-IN1.B19	d	C0863/2	hex	-	-	-	
CAN-IN1.B20	d	C0863/2	hex	-	-	-	
CAN-IN1.B21	d	C0863/2	hex	-	-	-	
CAN-IN1.B22	d	C0863/2	hex	-	-	-	
CAN-IN1.B23	d	C0863/2	hex	-	-	-	
CAN-IN1.B24	d	C0863/2	hex	-	-	-	
CAN-IN1.B25	d	C0863/2	hex	-	-	-	
CAN-IN1.B26	d	C0863/2	hex	-	-	-	
CAN-IN1.B27	d	C0863/2	hex	-	-	-	
CAN-IN1.B28	d	C0863/2	hex	-	-	-	
CAN-IN1.B29	d	C0863/2	hex	-	-	-	
CAN-IN1.B30	d	C0863/2	hex	-	-	-	
CAN-IN1.B31	d	C0863/2	hex	-	-	-	

Function

The input signals of the 8 byte user data of this CAN object are converted into corresponding signal types. The signals can be used via further function blocks.

Byte 1 and 2

Byte 1 and 2 form the control word for the controller. The bits 3, 8, 9, 10, and 11 of these bytes are directly transferred to the function block DCTRL, where they are linked to other signals. The other 11 bits can be used to control further function blocks.

Byte 3 and 4

form the signal to CAN-IN1.W1.

Byte 5, 6, 7 and 8

The meaning of these user data can be selected among different signal types. Depending on the requirement, these data can be evaluated as up to 2 analog signals, 32 digital signals or one phase signal. Mixed forms are also possible.

CAN-IN2

The process data object CAN-IN2 is provided for the event-driven transmission of process data and for communication among the controllers. However, decentralized inputs can also be evaluated.

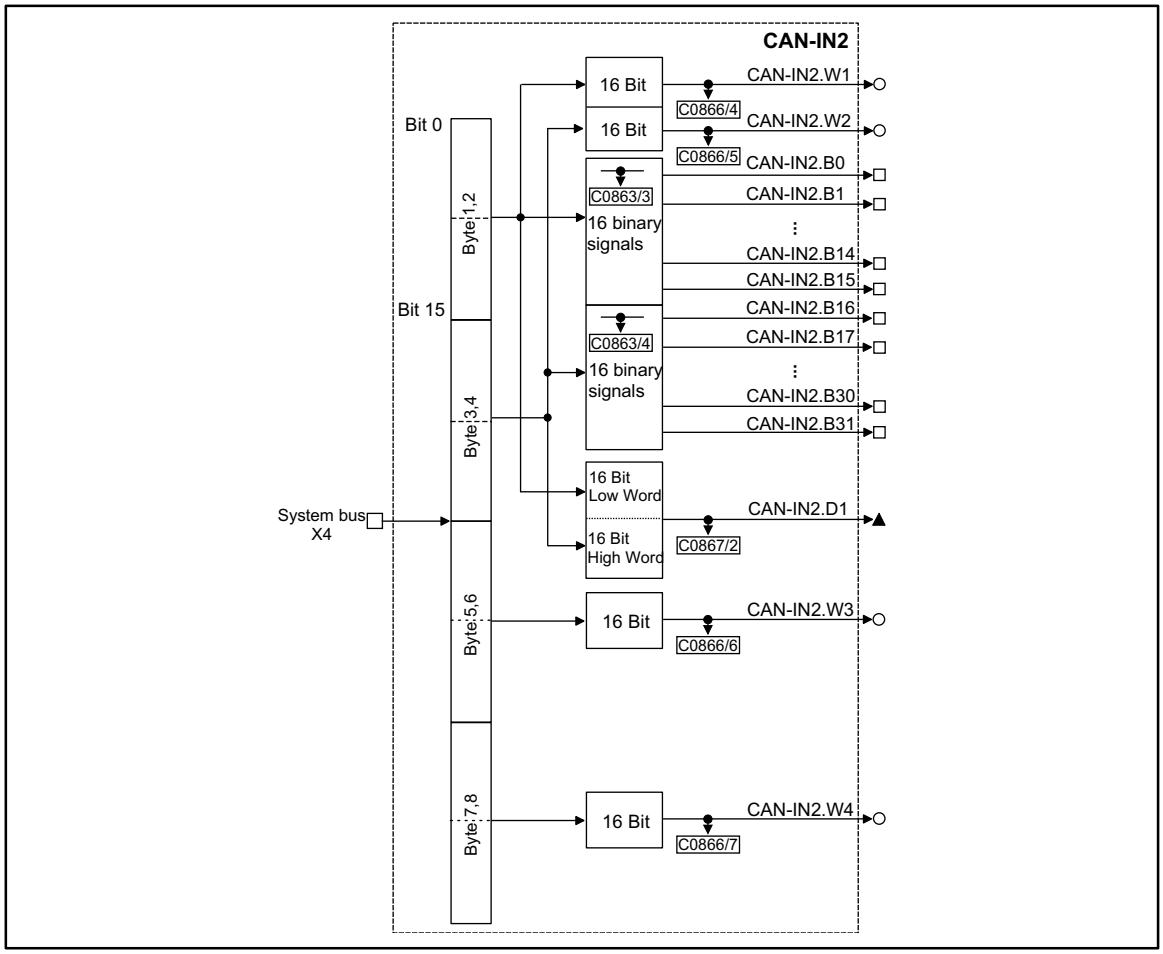

Fig. 7-53 Function block CAN-IN2

Function block library

Signal				Source			Note
Name	Type	DIS	DIS format	CFG	List	Lenze	
CAN-IN2.W1	a	C0866/4	dec [%]	-	-	-	+16384 = +100%
CAN-IN2.W2	a	C0866/5	dec [%]	-	-	-	+16384 = +100%
CAN-IN2.W3	a	C0866/6	dec [%]	-	-	-	+16384 = +100%
CAN-IN2.W4	a	C0866/7	dec [%]	-	-	-	+16384 = +100%
CAN-IN2.D1	ph	C0867/2	dec [inc]	-	-	-	65536 = 1 revolution
CAN-IN2.B0	d	C0863/3	hex	-	-	-	
CAN-IN2.B1	d	C0863/3	hex	-	-	-	
CAN-IN2.B2	d	C0863/3	hex	-	-	-	
CAN-IN2.B3	d	C0863/3	hex	-	-	-	
CAN-IN2.B4	d	C0863/3	hex	-	-	-	
CAN-IN2.B5	d	C0863/3	hex	-	-	-	
CAN-IN2.B6	d	C0863/3	hex	-	-	-	
CAN-IN2.B7	d	C0863/3	hex	-	-	-	
CAN-IN2.B8	d	C0863/3	hex	-	-	-	
CAN-IN2.B9	d	C0863/3	hex	-	-	-	
CAN-IN2.B10	d	C0863/3	hex	-	-	-	
CAN-IN2.B11	d	C0863/3	hex	-	-	-	
CAN-IN2.B12	d	C0863/3	hex	-	-	-	
CAN-IN2.B13	d	C0863/3	hex	-	-	-	
CAN-IN2.B14	d	C0863/3	hex	-	-	-	
CAN-IN2.B15	d	C0863/3	hex	-	-	-	
CAN-IN2.B16	d	C0863/4	hex	-	-	-	
CAN-IN2.B17	d	C0863/4	hex	-	-	-	
CAN-IN2.B18	d	C0863/4	hex	-	-	-	
CAN-IN2.B19	d	C0863/4	hex	-	-	-	
CAN-IN2.B20	d	C0863/4	hex	-	-	-	
CAN-IN2.B21	d	C0863/4	hex	-	-	-	
CAN-IN2.B22	d	C0863/4	hex	-	-	-	
CAN-IN2.B23	d	C0863/4	hex	-	-	-	
CAN-IN2.B24	d	C0863/4	hex	-	-	-	
CAN-IN2.B25	d	C0863/4	hex	-	-	-	
CAN-IN2.B26	d	C0863/4	hex	-	-	-	
CAN-IN2.B27	d	C0863/4	hex	-	-	-	
CAN-IN2.B28	d	C0863/4	hex	-	-	-	
CAN-IN2.B29	d	C0863/4	hex	-	-	-	
CAN-IN2.B30	d	C0863/4	hex	-	-	-	
CAN-IN2.B31	d	C0863/4	hex	-	-	-	

Function

The input signals of the 8 byte user data of this CAN object are converted into corresponding signal types. The signals can be used via further function blocks.

Byte 1, 2, 3 and 4

The meaning of these user data can be selected among different signal types. Depending on the requirement, these data can be evaluated as up to 2 analog signals, 32 digital signals or one phase signal. Mixed forms are also possible.

Byte 5 and 6

form the signal to CAN-IN2.W3.

Byte 7 and 8

form the signal to CAN-IN2.W4.

CAN-IN3

The process data object CAN-IN3 is provided for the event-driven transmission of process data and for communication among the controllers. However, decentralized inputs can also be evaluated.

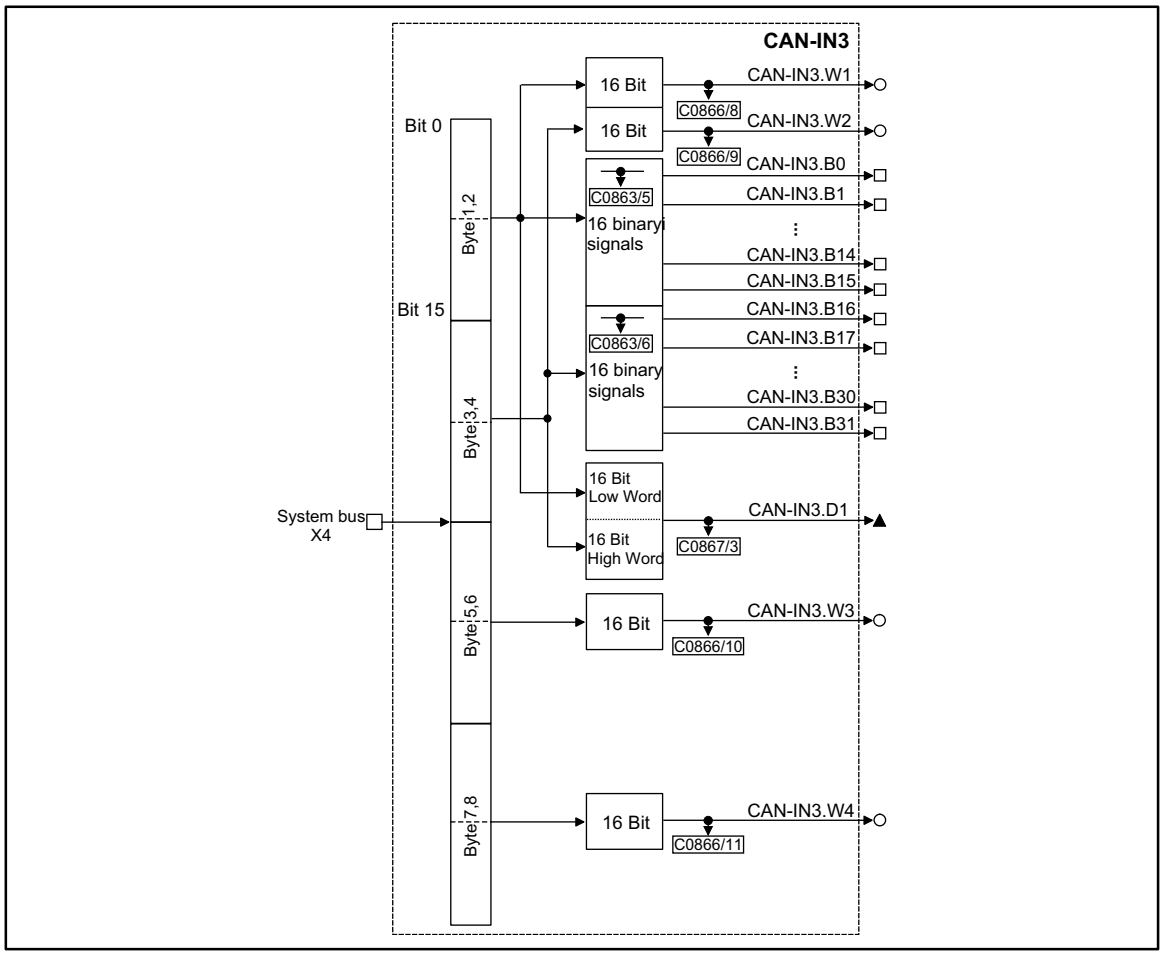

Fig. 7-54 Function block CAN-IN3

Function block library

Signal				Source			Note
Name	Type	DIS	DIS format	CFG	List	Lenze	
CAN-IN3.W1	a	C0866/8	dec [%]	-	-	-	+16384 = +100%
CAN-IN3.W2	a	C0866/9	dec [%]	-	-	-	+16384 = +100%
CAN-IN3.W3	a	C0866/10	dec [%]	-	-	-	+16384 = +100%
CAN-IN3.W4	a	C0866/11	dec [%]	-	-	-	+16384 = +100%
CAN-IN3.D1	ph	C0867/3	dec [inc]	-	-	-	65536 = 1 revolution
CAN-IN3.B0	d	C0863/5	hex	-	-	-	
CAN-IN3.B1	d	C0863/5	hex	-	-	-	
CAN-IN3.B2	d	C0863/5	hex	-	-	-	
CAN-IN3.B3	d	C0863/5	hex	-	-	-	
CAN-IN3.B4	d	C0863/5	hex	-	-	-	
CAN-IN3.B5	d	C0863/5	hex	-	-	-	
CAN-IN3.B6	d	C0863/5	hex	-	-	-	
CAN-IN3.B7	d	C0863/5	hex	-	-	-	
CAN-IN3.B8	d	C0863/5	hex	-	-	-	
CAN-IN3.B9	d	C0863/5	hex	-	-	-	
CAN-IN3.B10	d	C0863/5	hex	-	-	-	
CAN-IN3.B11	d	C0863/5	hex	-	-	-	
CAN-IN3.B12	d	C0863/5	hex	-	-	-	
CAN-IN3.B13	d	C0863/5	hex	-	-	-	
CAN-IN3.B14	d	C0863/5	hex	-	-	-	
CAN-IN3.B15	d	C0863/5	hex	-	-	-	
CAN-IN3.B16	d	C0863/6	hex	-	-	-	
CAN-IN3.B17	d	C0863/6	hex	-	-	-	
CAN-IN3.B18	d	C0863/6	hex	-	-	-	
CAN-IN3.B19	d	C0863/6	hex	-	-	-	
CAN-IN3.B20	d	C0863/6	hex	-	-	-	
CAN-IN3.B21	d	C0863/6	hex	-	-	-	
CAN-IN3.B22	d	C0863/6	hex	-	-	-	
CAN-IN3.B23	d	C0863/6	hex	-	-	-	
CAN-IN3.B24	d	C0863/6	hex	-	-	-	
CAN-IN3.B25	d	C0863/6	hex	-	-	-	
CAN-IN3.B26	d	C0863/6	hex	-	-	-	
CAN-IN3.B27	d	C0863/6	hex	-	-	-	
CAN-IN3.B28	d	C0863/6	hex	-	-	-	
CAN-IN3.B29	d	C0863/6	hex	-	-	-	
CAN-IN3.B30	d	C0863/6	hex	-	-	-	
CAN-IN3.B31	d	C0863/6	hex	-	-	-	

Function

The input signals of the 8 byte user data of this CAN object are converted into corresponding signal types. The signals can be used via further function blocks.

Byte 1, 2, 3 and 4

The meaning of these user data can be selected among different signal types. Depending on the requirement, these data can be evaluated as up to 2 analog signals, 32 digital signals or one phase signal. Mixed forms are also possible.

Byte 5 and 6

form the signal to CAN-IN3.W3.

Byte 7 and 8

form the signal to CAN-IN3.W4.

7.6.15 System bus (CAN-OUT)

Purpose

Interface for output signals from the system bus for setpoints and actual values as binary, analog, or phase information. (📖 7-73)

CAN-OUT1

The process data object CAN-OUT1 is provided for the cyclic transmission of process data and the communication with a superimposed master.

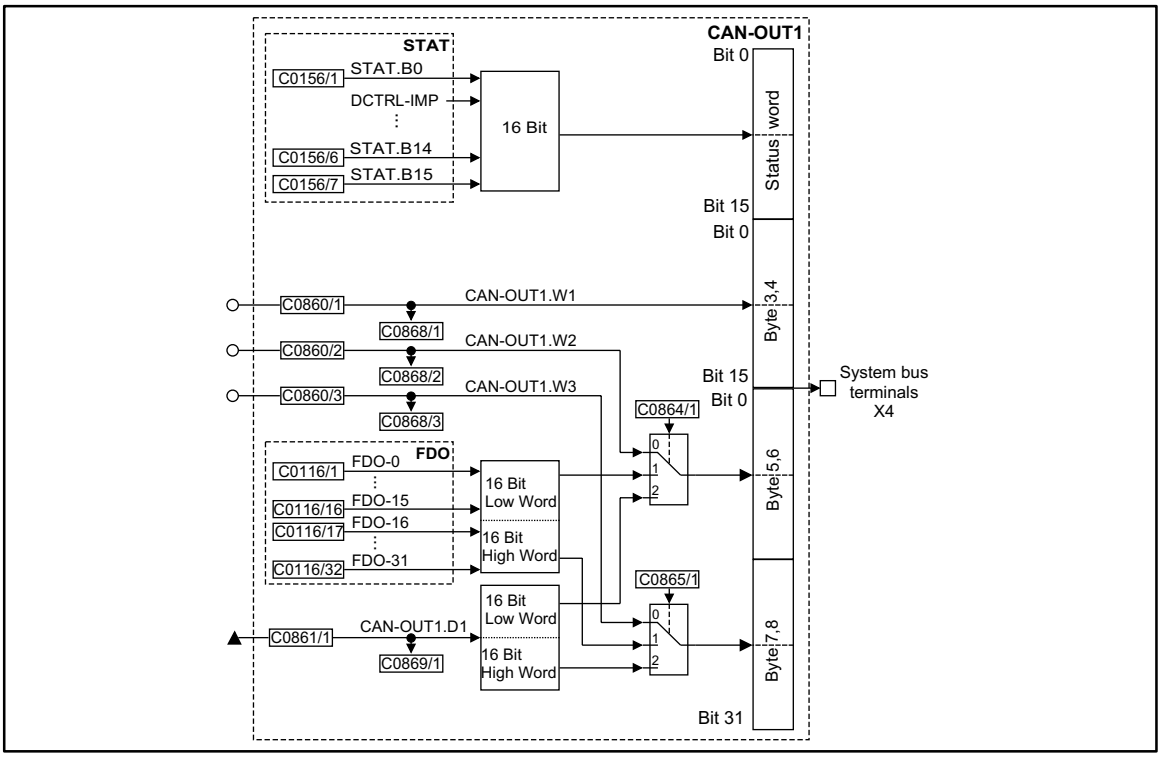

Fig. 7-55 System bus (CAN-OUT1)

Signal				Source			Note
Name	Type	DIS	DIS format	CFG	List	Lenze	
CAN-OUT1.W1	a	C0868/1	dec [%]	C0860/1	1	1000	+100 % = +16384
CAN-OUT1.W2	a	C0868/2	dec [%]	C0860/2	1	1000	+100 % = +16384
CAN-OUT1.W3	a	C0868/3	dec [%]	C0860/3	1	1000	+100 % = +16384
CAN-OUT1.D1	ph	C0869/1	dec [inc]	C0861/1	4	1000	1 revolution = 65536

Function

The input signals of this function block are copied to the 8 byte user data of CAN object 1 and laid on the system bus. The meaning of the user data can be determined very easily with C0864/1 and C0865/1 and the corresponding configuration code (CFG).

Byte 1 and 2

Here, the status word of the function block STAT is mapped. (📖 7-170)
Some of the bits are freely assignable.

Byte 3 and 4

Here, the analog signal configured at the input CAN-OUT1.W1 is mapped.

Byte 5, 6, 7 and 8

The meaning of these user data can be selected among different signal types. Depending on the requirement, up to two analog signals, 32 digital signals of the function block FDO or a phase signal can be selected.Mixed forms are also possible.

Example:

16 digital signals and one analog signal are to be output.

The digital signals are output by the function block FDO. The bits 16 to 31 are to be output. For this, set C0865/1 = 1. These bits are output on byte 7 and 8.

This means that the analog signal is lead via CAN-OUT1.W2. For this, set C0864/1 = 0. These bits are output on byte 5 and 6. An analog signal source is assigned to the input under configuration code C0860/2.

CAN-OUT2

The process data object CAN-OUT2 is provided for the event-driven transmission of process data and for communication among the controllers. Decentralized outputs can also be accessed.

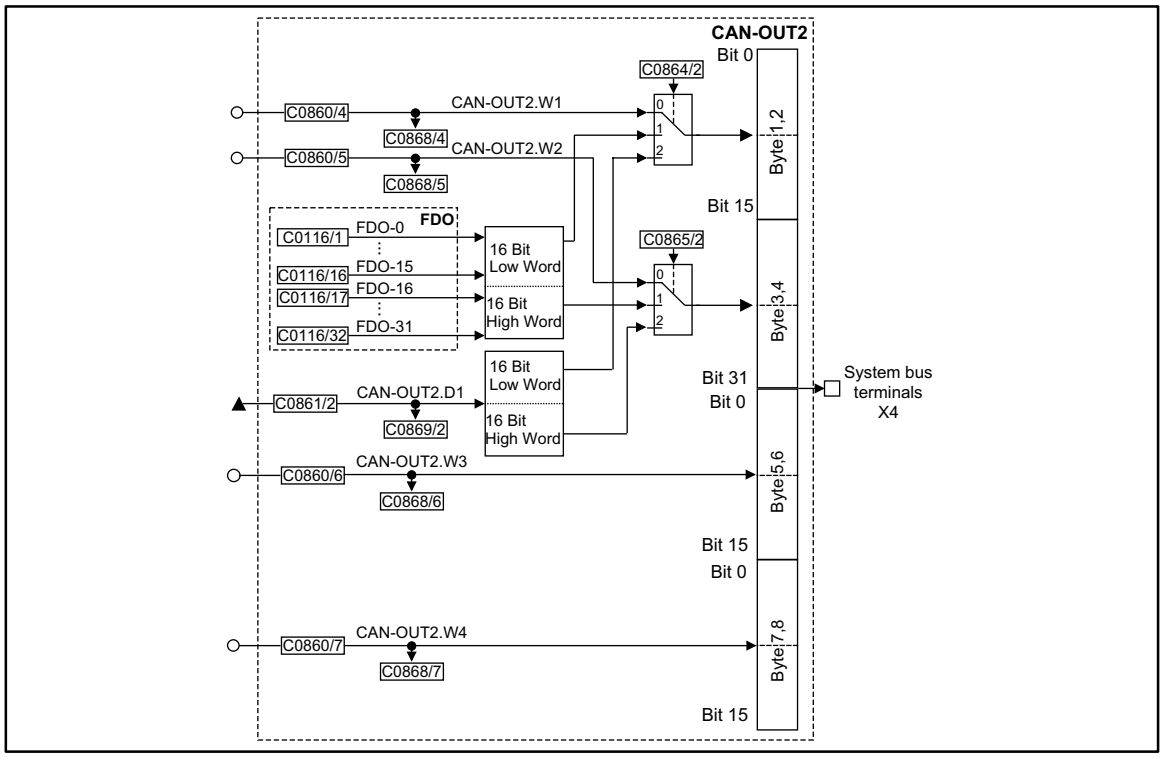

Fig. 7-56 System bus (CAN-OUT2)

Signal				Source			Note
Name	Type	DIS	DIS format	CFG	List	Lenze	
CAN-OUT2.W1	a	C0868/4	dec [%]	C0860/4	1	1000	+100 % = +16384
CAN-OUT2.W2	a	C0868/5	dec [%]	C0860/5	1	1000	+100 % = +16384
CAN-OUT2.W3	a	C0868/6	dec [%]	C0860/6	1	1000	+100 % = +16384
CAN-OUT2.W4	a	C0868/7	dec [%]	C0860/7	1	1000	+100 % = +16384
CAN-OUT2.D1	ph	C0869/2	dec [inc]	C0861/2	4	1000	1 revolution = 65536

Function

The input signals of this function block are copied to the 8 byte user data of CAN object 2 and laid on the system bus. The meaning of the user data can be determined very easily with C0864/2 and C0865/2 and the corresponding configuration code (CFG).

Byte 1, 2, 3 and 4

The meaning of these user data can be selected among different signal types. Depending on the requirement, up to two analog signals, 32 digital signals of the function block FDO or a phase signal can be selected.Mixed forms are also possible.

Byte 5 and 6

Here, the analog signal configured at the input CAN-OUT2.W3 is mapped.

Byte 7 and 8

Here, the analog signal configured at the input CAN-OUT2.W4 is mapped.

CAN-OUT3

The process data object CAN-OUT3 is provided for the event-driven transmission of process data and for communication among the controllers. Decentralized outputs can also be accessed.

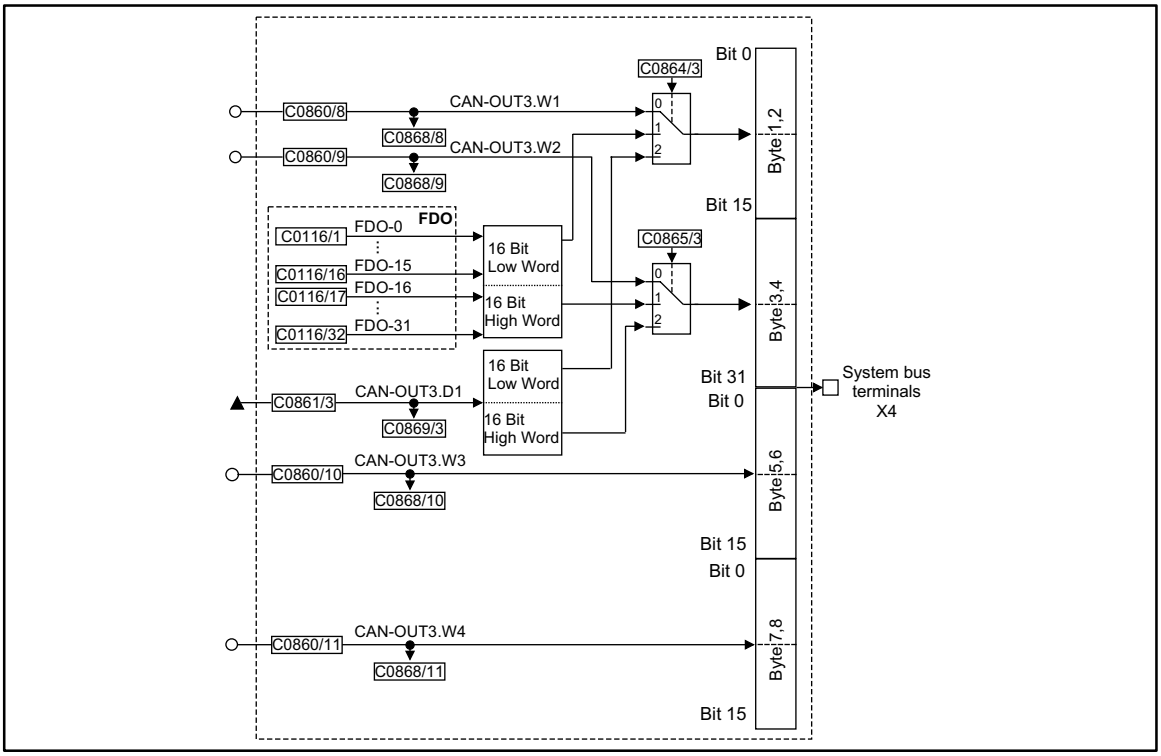

Fig. 7-57 System bus (CAN-OUT3)

Signal				Source			Note
Name	Type	DIS	DIS format	CFG	List	Lenze	
CAN-OUT3.W1	a	C0868/8	dec [%]	C0860/8	1	1000	+100 % = +16384
CAN-OUT3.W2	a	C0868/9	dec [%]	C0860/9	1	1000	+100 % = +16384
CAN-OUT3.W3	a	C0868/10	dec [%]	C0860/10	1	1000	+100 % = +16384
CAN-OUT3.W4	a	C0868/11	dec [%]	C0860/11	1	1000	+100 % = +16384
CAN-OUT3.D1	ph	C0869/3	dec [inc]	C0861/3	4	1000	1 revolution = 65536

Function

The input signals of this function block are copied to the 8 byte user data of CAN object 3 and laid on the system bus. The meaning of the user data can be determined very easily with C0864/3 and C0865/3 and the corresponding configuration code (CFG).

Byte 1, 2, 3 and 4

The meaning of these user data can be selected among different signal types. Depending on the requirement, up to two analog signals, 32 digital signals of the function block FDO or a phase signal can be selected.Mixed forms are also possible.

Byte 5 and 6

Here, the analog signal configured at the input CAN-OUT3.W3 is mapped.

Byte 7 and 8

Here, the analog signal configured at the input CAN-OUT3.W4 is mapped.

7.6.16 Comparator (CMP)

Purpose

These function blocks are used to compare two analog signals with each other.

Two comparators are available. They can be used to implement threshold switches:

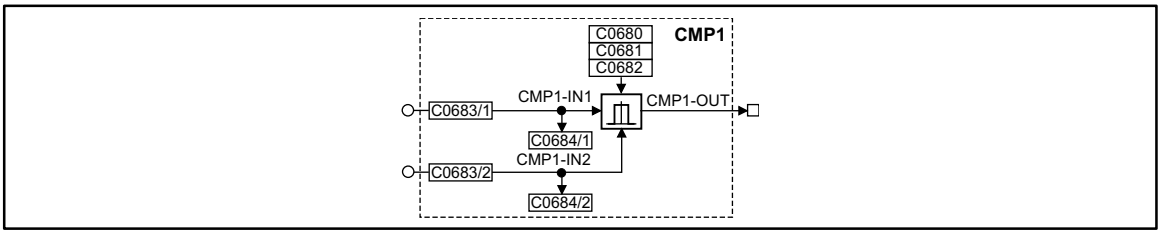

Fig. 7-58 Comparator (CMP1)

Signal				Source			Note
Name	Type	DIS	DIS format	CFG	List	Lenze	
CMP1-IN1	a	C0684/1	dec [%]	C0683/1	1	5001	-
CMP1-IN2	a	C0684/2	dec [%]	C0683/2	1	19500	-
CMP1-OUT	a	-	-	-	-	-	-

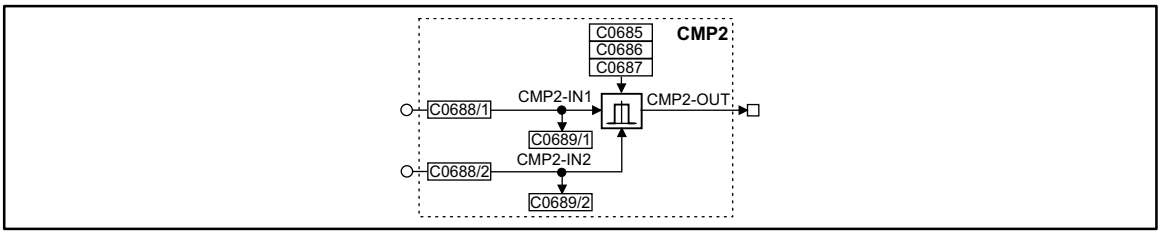

Fig. 7-59 Comparator (CMP2)

Signal				Source			Note
Name	Type	DIS	DIS format	CFG	List	Lenze	
CMP2-IN1	a	C0689/1	dec [%]	C0688/1	1	1000	-
CMP2-IN2	a	C0689/2	dec [%]	C0688/2	1	1000	-
CMP2-OUT	a	-	-	-	-	-	-

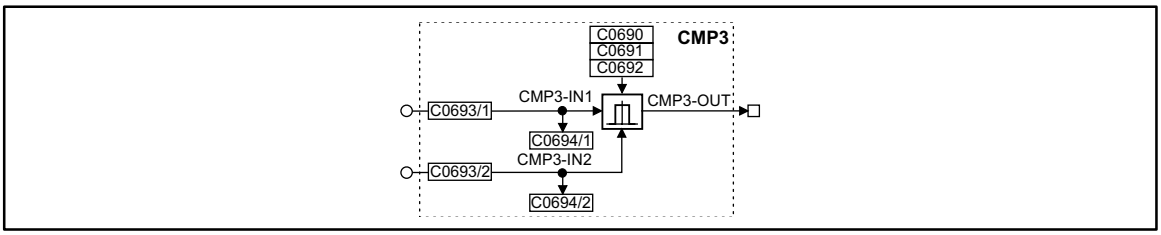

Fig. 7-60 Comparator (CMP3)

Signal				Source			Note
Name	Type	DIS	DIS format	CFG	List	Lenze	
CMP3-IN1	a	C0694/1	dec [%]	C0693/1	1	1000	-
CMP3-IN2	a	C0694/2	dec [%]	C0693/2	1	1000	-
CMP3-OUT	a	-		-	-	-	-

Function

The description is an example for CMP1 and is also suitable for CMP2 and CMP3.

The function of these function blocks can be set under code C0680 (CMP1). The following comparator functions are available:

- CMP1-IN1 = CMP1-IN2
- CMP1-IN1 > CMP1-IN2
- CMP1-IN1 < CMP1-IN2
- |CMP1-IN1| = |CMP1-IN2|
- |CMP1-IN1| > |CMP1-IN2|
- |CMP1-IN1| < |CMP1-IN2|

7.6.16.1 Function 1: CMP1-IN1 = CMP1-IN2

This function is used to find out whether two signals are identical.

- Under code C0682 you can set the window of equality.
- Under code C0681 a hysteresis can be set if the input signals are not stable and therefore the output oscillates.

The exact function can be obtained from the line diagram.

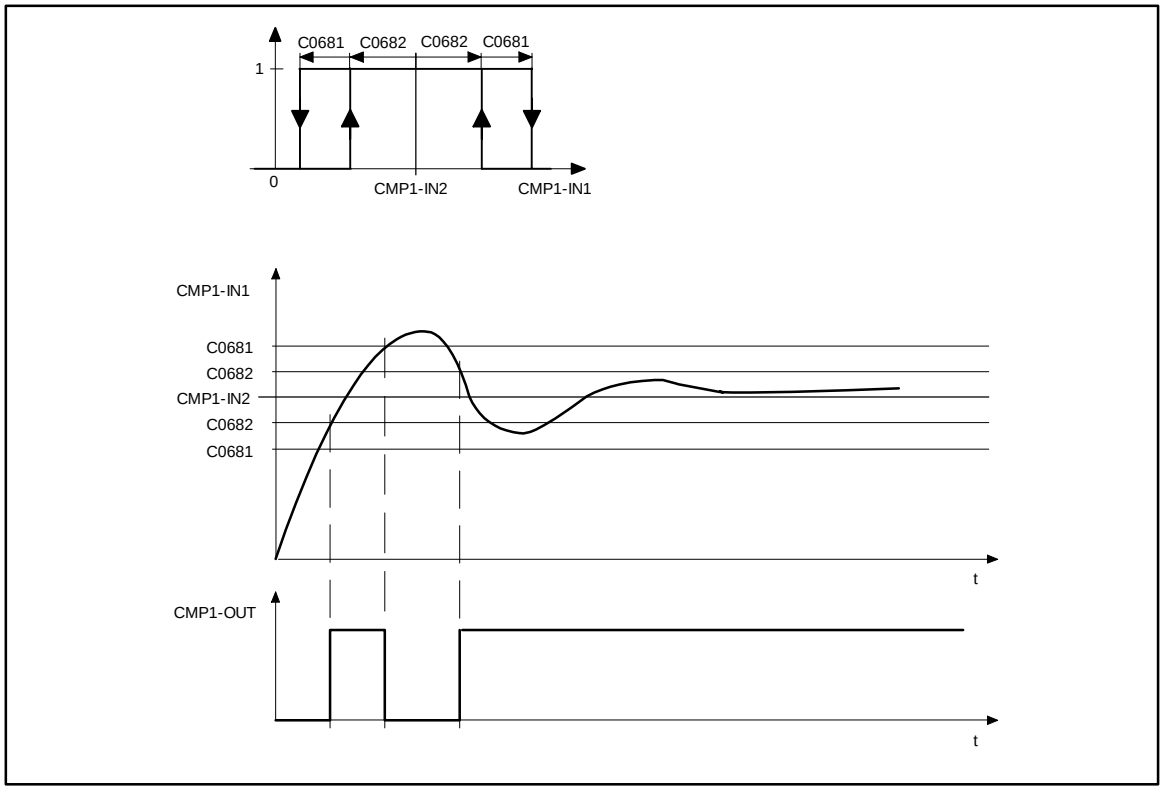

Fig. 7-61 Equality of signals (CMP1-IN1 = CMP1-IN2)

Example:

This function is used to obtain the comparison "Actual speed is equal to setpoint speed ($n_{act} = n_{set}$)".

7.6.16.2 Function 2: CMP1-IN1 > CMP1-IN2

- If the value at the input CMP1-IN1 exceeds the value at the input CMP1-IN2, the output CMP1-OUT changes from LOW to HIGH.
- If the signal at input CMP1-IN1 falls below the value of CMP1-IN2 - C0681 again, the output changes from HIGH to LOW.

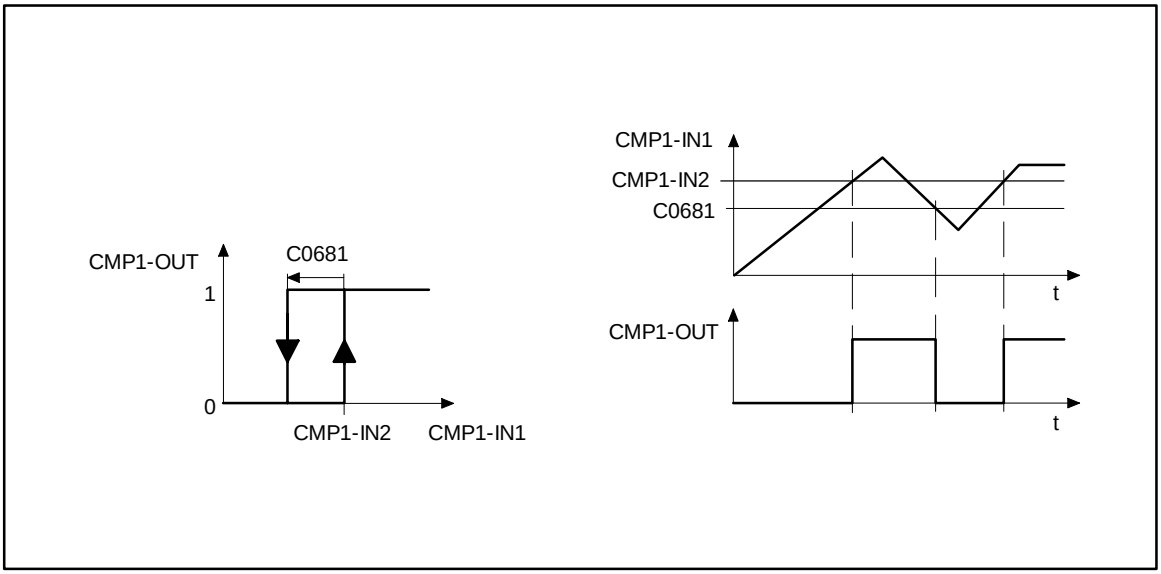

Fig. 7-62 Exceeding signal values (CMP1-IN1 > CMP1-IN2)

Example:

This function is used to obtain the comparison "Actual speed is higher than a limit value ($n_{act} > n_x$)" for one direction of rotation.

7.6.16.3 Function 3: CMP1-IN1 < CMP1-IN2

- If the value at the input CMP1-IN1 falls below the value at the input CMP1-IN2, the output CMP1-OUT changes from LOW to HIGH.
- If the signal at input CMP1-IN1 exceeds the value of CMP1-IN2 + C0681 again, the output changes from HIGH to LOW.

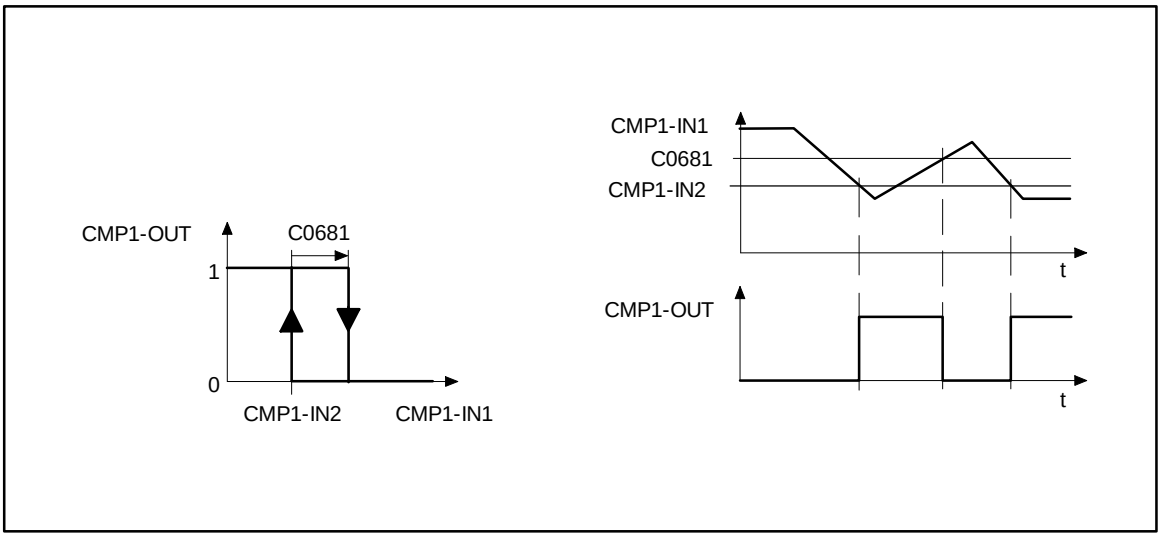

Fig. 7-63 A value falls below signal values (CMP1-IN1 < CMP1-IN2)

Example:

This function is used to obtain the comparison "Actual speed is lower than a limit value ($n_{act} > n_x$)" for one direction of rotation.

7.6.16.4 Function 4: |CMP1-IN1| = |CMP1-IN2|

This function is the same as function 1. The absolute value of the input signals (without sign) is generated here before the signal processing.

Example:

This function is used to obtain the comparison "$n_{act} = 0$".

7.6.16.5 Function 5: |CMP1-IN1| > |CMP1-IN2|

This function is the same as function 3. The absolute value of the input signals (without sign) is generated here before the signal processing.

Example:

This function is used to obtain the comparison "$|n_{act}| > |n_x|$" independently of the direction of rotation.

7.6.16.6 Function 6: |CMP1-IN1| < |CMP1-IN2|

This function is the same as function 2. The absolute value of the input signals (without sign) is generated here before the signal processing.

Example:

This function is used to obtain the comparison "$|n_{act}| < |n_x|$" independently of the direction of rotation.

7.6.17 Signal conversion (CONV)

Purpose

These function blocks can be used to standardize signals or signal types or to convert signal types into different signal types.The conversion is very precise by providing the conversion factor as numerator and denominator.

CONV1

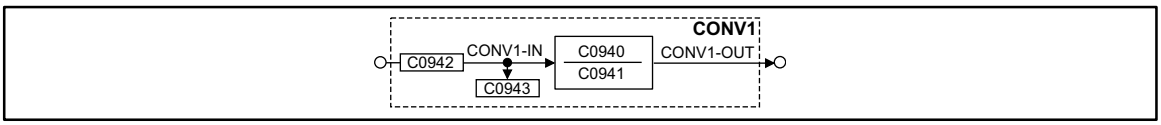

Fig. 7-64 Function block CONV1

Signal				Source			Note
Name	Type	DIS	DIS format	CFG	List	Lenze	
CONV1-IN	a	C0943	dec [%]	C0942	1	1000	
CONV1-OUT	a	-	-	-	-	-	Limited to ±199.99 %

This function block is used to multiply or divide analog signals.

The conversion is done according to the formula:

$$\text{CONV1–OUT} = \text{CONV1–IN} \cdot \frac{\text{C0940}}{\text{C0941}}$$

Example:

An analog signal is to be multiplied with 1.12.
For this, enter C0940 = 112 and C0941 = 100.

CONV2

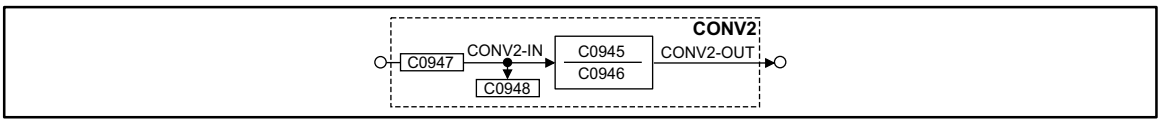

Fig. 7-65 Function block CONV2

Signal				Source			Note
Name	Type	DIS	DIS format	CFG	List	Lenze	
CONV2-IN	a	C0948	dec [%]	C0947	1	1000	
CONV2-OUT	a	-	-	-	-	-	Limited to ±199.99 %

This function block is used to multiply or divide analog signals.

The conversion is done according to the formula:

$$\text{CONV2–OUT} = \text{CONV2–IN} \cdot \frac{\text{C0945}}{\text{C0946}}$$

CONV3

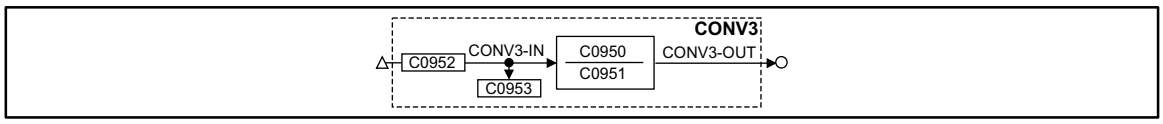

Fig. 7-66 Function block CONV3

Signal				Source			Note
Name	Type	DIS	DIS format	CFG	List	Lenze	
CONV3-IN	phd	C0953	dec [rpm]	C0952	4	1000	
CONV3-OUT	a	-	-	-	-	-	Limited to ±199.99 %

This function block is used to convert speed signals into analog signals.

The conversion is done according to the formula:

$$\text{CONV3-OUT} = \text{CONV3-IN} \cdot \frac{100\%}{15000\text{rpm}} \cdot \frac{\text{C0950}}{\text{C0951}}$$

CONV4

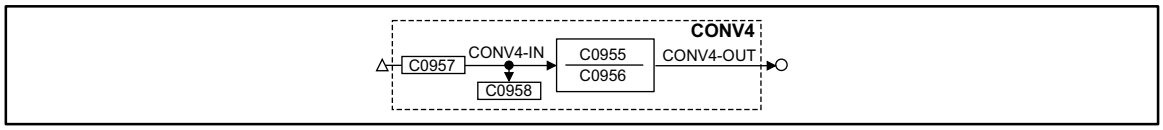

Fig. 7-67 Function block CONV4

Signal				Source			Note
Name	Type	DIS	DIS format	CFG	List	Lenze	
CONV4-IN	phd	C0958	dec [rpm]	C0957	4	1000	
CONV4-OUT	a	-	-	-	-	-	Limited to ±199.99 %

This function block is used to convert speed signals into analog signals.

The conversion is done according to the formula:

$$\text{CONV4-OUT} = \text{CONV4-IN} \cdot \frac{100\%}{15000\text{rpm}} \cdot \frac{\text{C0955}}{\text{C0956}}$$

CONV5

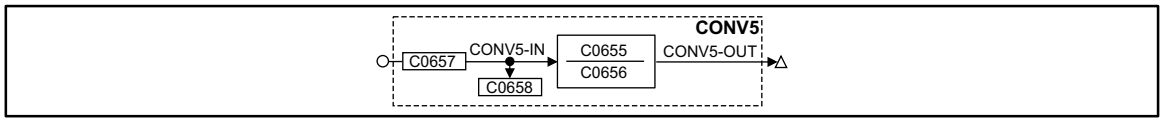

Fig. 7-68 Function block CONV5

Signal				Source			Note
Name	Type	DIS	DIS format	CFG	List	Lenze	
CONV5-IN	a	C0658	dec [%]	C0657	1	1000	
CONV5-OUT	phd	-	-	-	-	-	Limited to ±29999 rpm

This function block is used to convert analog signals into speed signals.

The conversion is done according to the formula:

$$\text{CONV5-OUT} = \text{CONV5-IN} \cdot \frac{15000\text{rpm}}{100\%} \cdot \frac{\text{C0655}}{\text{C0656}}$$

7.6.18 Phase conversion (CONVPHA)

Purpose

Converts a phase signal into an analog signal and into a speed signal.

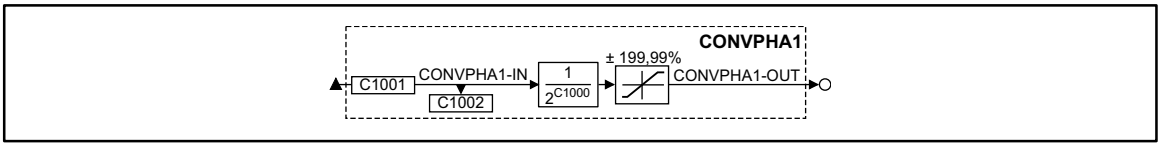

Fig. 7-69 Phase conversion (CONVPHA1)

Signal				Source		Note
Name	Type	DIS	DIS format	CFG	List	
CONVPHA1-IN	ph	C1002	dec [inc]	C1001	3	-
CONVPHA1-OUT	a	-	-	-	-	Limited to ±199.99 %, remainder considered
CONVPHA1-OUT2	phd	-	-	-	-	Limited to ±32767 rpm, remainder considered

Function

- Conversion with adaptation using divisor.
- The conversion is done according to the formulae:

$$\text{CONVPHA1-OUT [\%]} = \text{CONVPHA1-IN [inc]} \cdot \frac{100}{2^{14} \cdot 2^{C1000}}$$

$$\text{CONVPHA1-OUT2 [rpm]} = \text{CONVPHA1-IN [inc]} \cdot \frac{1875}{2^{14} \cdot 2^{C1000}}$$

$$\text{CONVPHA1-OUT2 [inc]} = \text{CONVPHA1-IN [inc]} \cdot \frac{1}{2^{C1000}}$$

7.6.19 Characteristic function (CURVE)

Purpose

Conversion of an analog signal into a characteristic.

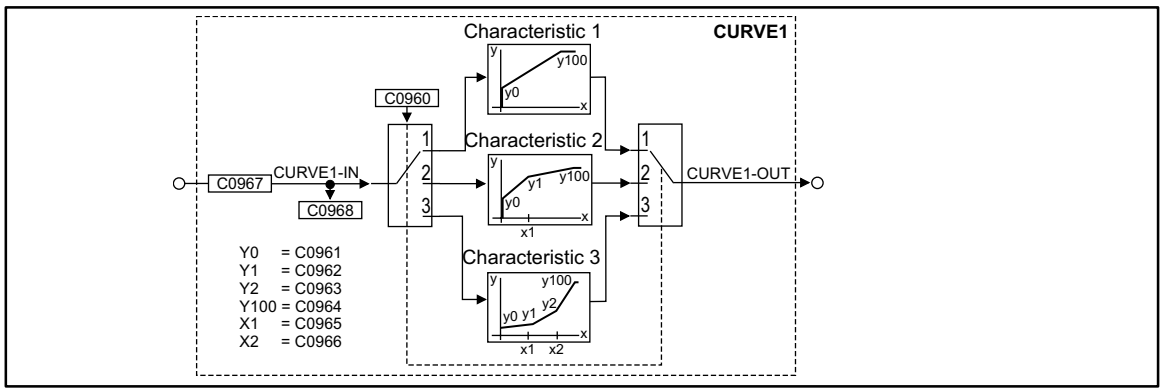

Fig. 7-70 Characteristic function (CURVE1)

Signal				Source			Note
Name	Type	DIS	DIS format	CFG	List	Lenze	
CURVE1-IN	a	C0968	dec [%]	C0967	1	5001	-
CURVE1-OUT	a	-	-	-	-	-	-

Scope of functions

Under C0960, you can select the function:

- Characteristic with two co-ordinates
- Characteristic with three co-ordinates
- Characteristic with four co-ordinates

The codes for entering the co-ordinates can be obtained from the line diagrams.

A linear interpolation is carried out between the co-ordinates.

For negative input values at CURVEx-IN, the settings of the co-ordinates are processed inversely (see line diagrams).If this is not required:

- Connect absolute value generator (ABS) before or after the CURVE function block

or

- Connect limiter (LIM) before or after the CURVE function block

7.6.19.1 Characteristic with two co-ordinates

Set C0960 = 1.

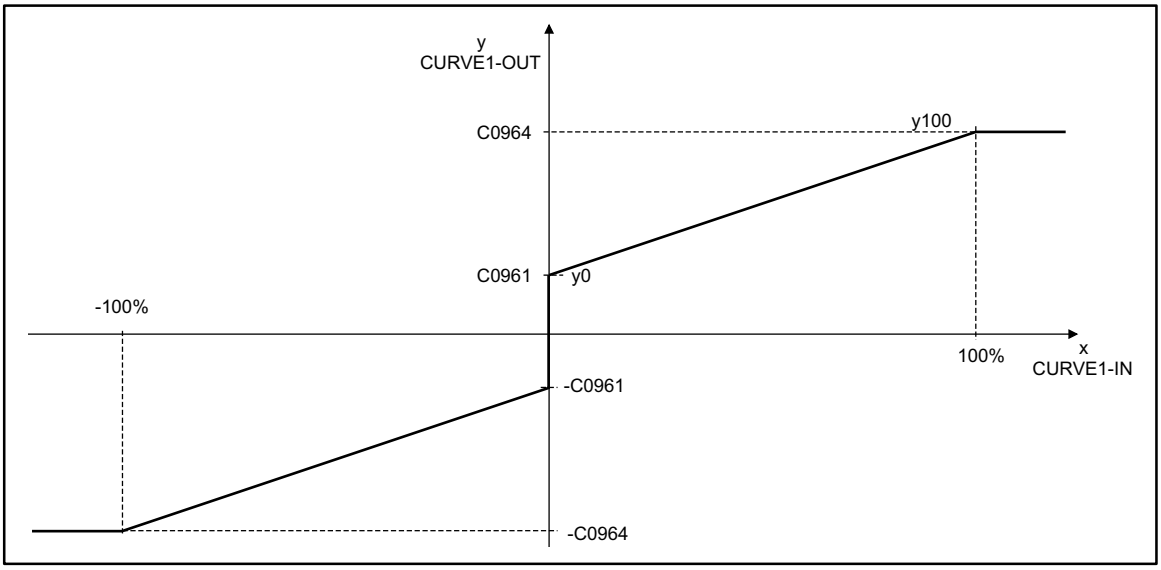

Fig. 7-71 Line diagram with 2 co-ordinates

7.6.19.2 Characteristic with three co-ordinates

Set C0960 = 2.

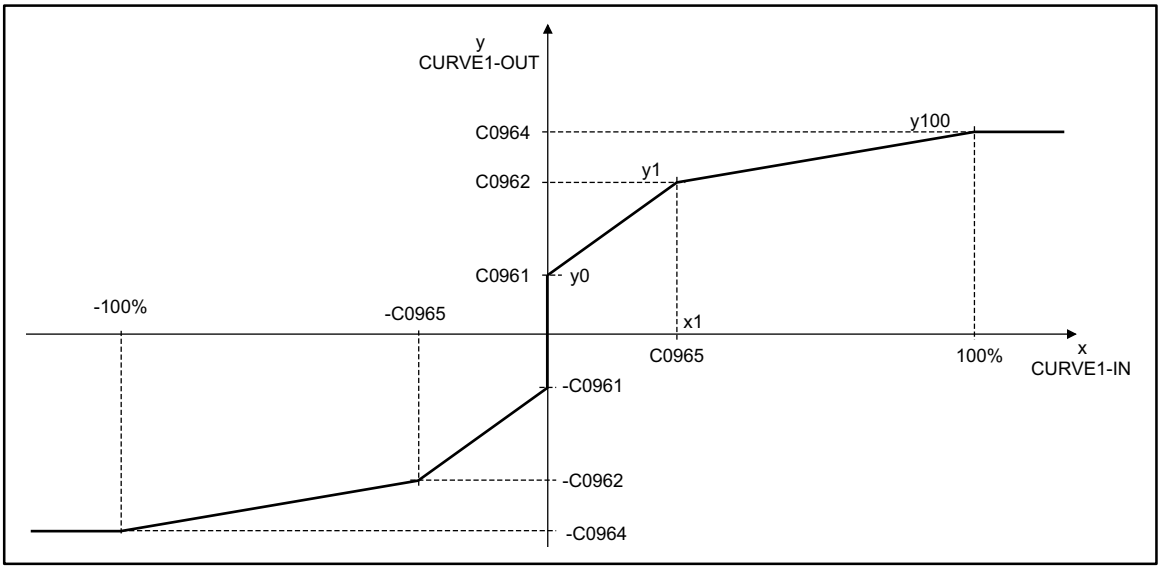

Fig. 7-72 Line diagram with three co-ordinates

7.6.19.3 Characteristic with four co-ordinates

Set C0960 = 3.

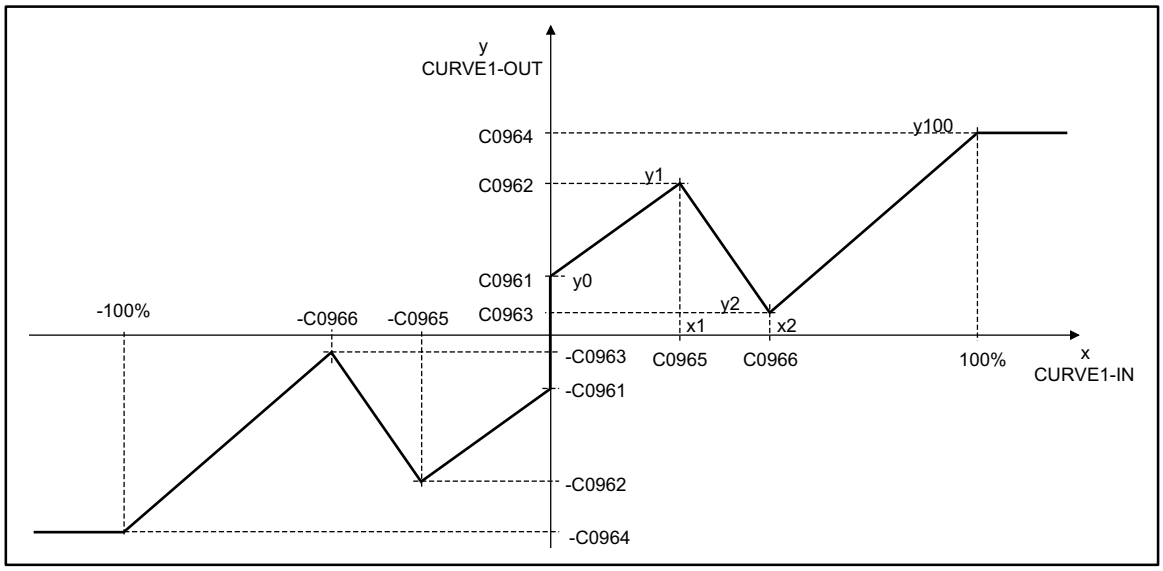

Fig. 7-73 Line diagram characteristic with four co-ordinates

7.6.20 Dead band (DB)

Purpose

The dead band element is used to set interfering influences around zero, e.g. interferences on analog input voltages, to digital zero.

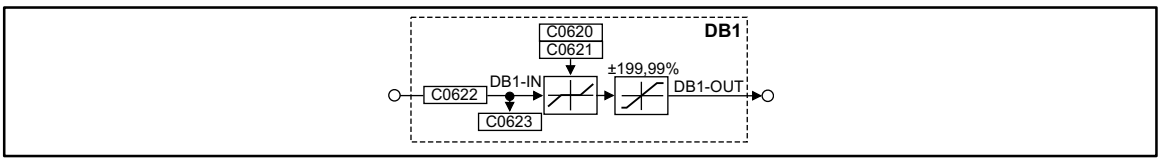

Fig. 7-74 Dead band element (DB1)

Signal				Source			Note
Name	Type	DIS	DIS format	CFG	List	Lenze	
DB1-IN	a	C0623	dec [%]	C0622	1	1000	-
DB1-OUT	a	-	-	-	-	-	limited to ±199.99 %

Function

- The dead band is parameterized under C0621.
- The gain is set under C0620.

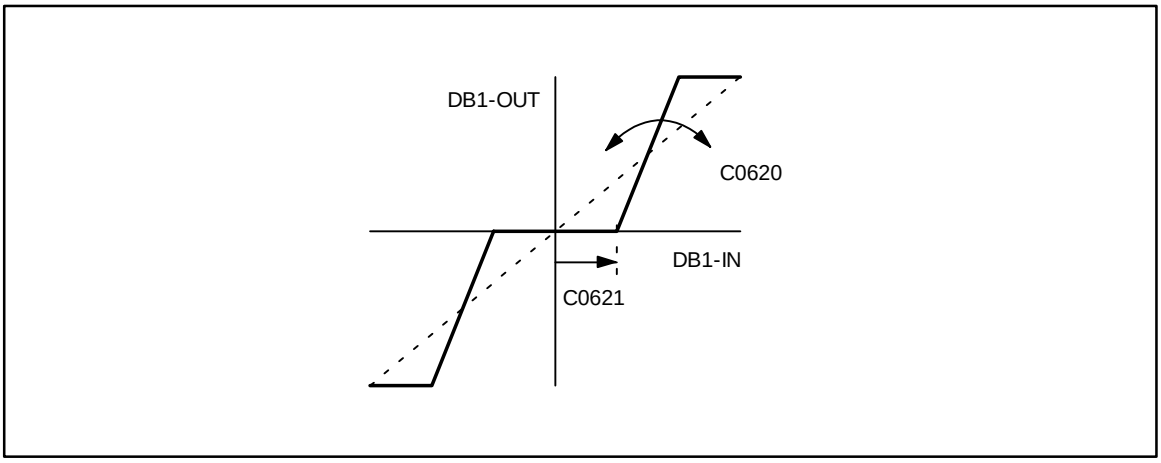

Fig. 7-75 Dead band and gain

7.6.21 Control of the controller (DCTRL)

Purpose

This function block is used to control the controller into different states (e.g. Trip, Trip-Reset, quick stop or controller inhibit).

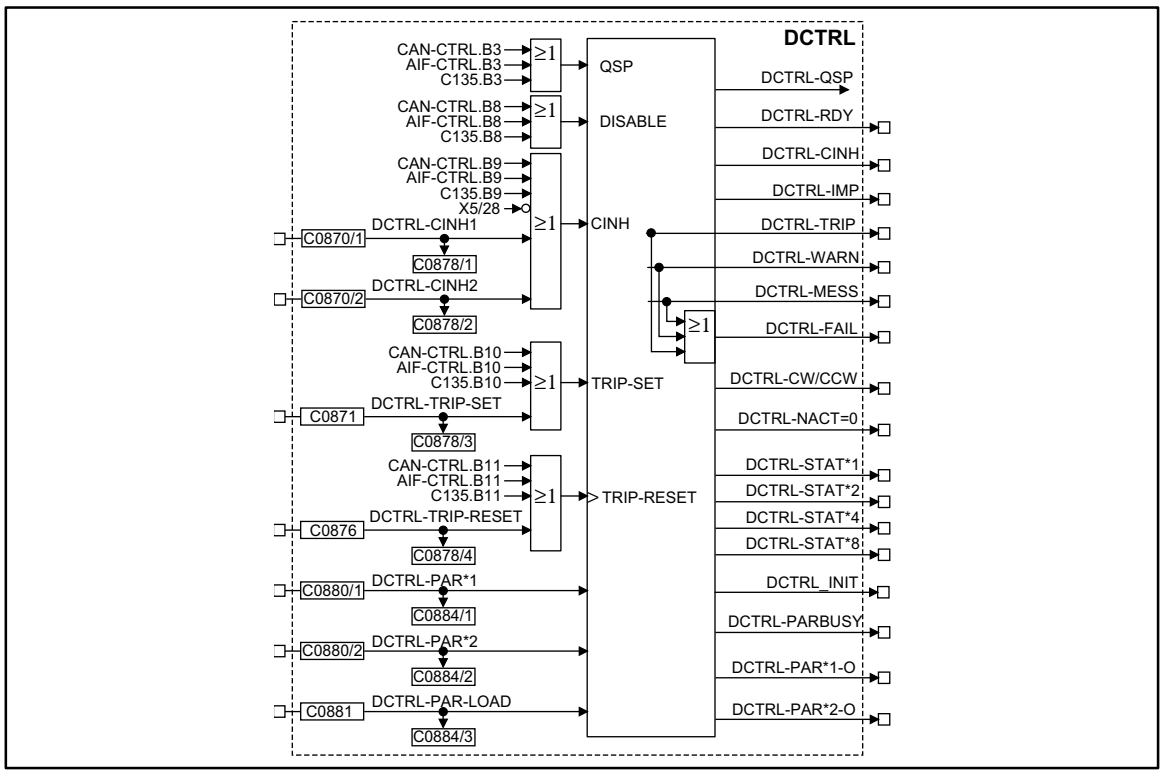

Fig. 7-76 Function block DCTRL

Signal				Source			Note
Name	Type	DIS	DIS format	CFG	List	Lenze	
DCTRL-CINH1	d	C0878/1	bin	C0870/1	2	1000	HIGH = inhibit controller
DCTRL-CINH2	d	C0878/2	bin	C0870/2	2	1000	HIGH = inhibit controller
DCTRL-TRIP-SET	d	C0878/3	bin	C0871	2	54	HIGH = fault indication EEr
DCTRL-TRIPRESET	d	C0878/4	bin	C0876	2	55	LOW-HIGH signal = Trip reset
DCTRL-PAR*1	d	C0884/1	bin	C0880/1	2	1000	Select parameter set
DCTRL-PAR*2	d	C0884/2	bin	C0880/2	2	1000	Select parameter set
DCTRL-PAR-LOAD	d	C0884/3	bin	C0881	2	1000	LOW-HIGH signal = Load parameter set
DCTRL-RDY	d	-	bin	-	-	-	HIGH = Ready for operation
DCTRL-CINH	d	-	bin	-	-	-	HIGH = Controller reset
DCTRL-IMP	d	-	bin	-	-	-	HIGH = High-resistance power output stages
DCTRL-TRIP	d	-	bin	-	-	-	HIGH = Active fault
DCTRL-WARNING	d	-	bin	-	-	-	HIGH = Active warning
DCTRL-MESSAGE	d	-	bin	-	-	-	HIGH = Active message
DCTRL-CW/CCW	d	-	bin	-	-	-	LOW = CW rotation, HIGH = CCW rotation
DCTRL-NACT=0	d	-	bin	-	-	-	HIGH = Motor speed < C0019
DCTRL-STAT*1	d	-	bin	-	-	-	general status (binary coded)
DCTRL-STAT*2	d	-	bin	-	-	-	general status (binary coded)
DCTRL-STAT*4	d	-	bin	-	-	-	general status (binary coded)
DCTRL-STAT*8	d	-	bin	-	-	-	general status (binary coded)
DCTRL-PARBUSY	d	-	bin	-	-	-	HIGH = Change of parameter set active
DCTRL-PAR*1-0	d	-	bin	-	-	-	Parameter set X active (binary coded)
DCTRL-PAR*2-0	d	-	bin	-	-	-	Parameter set X active (binary coded)

Function

- Quick stop (QSP)
- Operation inhibited (DISABLE)
- Controller inhibit (CINH)
- TRIP-SET
- TRIP-RESET
- Change of parameter set (PAR)
- Controller state

7.6.21.1 Quick stop (QSP)

The drive is braked to standstil via the deceleration ramp C105 and generates a holding torque.

- The function can be controlled by three inputs
  – Control word CAN-CTRL bit 3 of CAN-IN1
  – Control word AIF-CTRL bit 3 of AIF-IN
  – Control word C0135 bit 3
- All inputs are linked by an OR-operation.

7.6.21.2 Operation inhibited (DISABLE)

In this state, the drive cannot be started by the command ”controller enable”. The power output stages are inhibited. All controllers are reset.

- The function can be controlled by three inputs
  – Control word CAN-CTRL bit 8 of CAN-IN1
  – Control word AIF-CTRL bit 8 of AIF-IN
  – Control word C0135 bit 8
- All inputs are linked by an OR-operation.

7.6.21.3 Controller inhibit (CINH)

The power output stages are inhibited. All controllers are reset.

- The function can be controlled by six inputs
  – Terminal X5/28 (LOW = controller inhibit)
  – Control word CAN-CTRL bit 9 of CAN-IN1
  – Control word AIF-CTRL bit 9 of AIF-IN
  – Control word C0135 bit 9
  – Free inputs DCTRL-CINH1 and DCTRL-CINH2
- All inputs are linked by an OR-operation.

7.6.21.4 TRIP-SET

The drive is controlled into the state under code C0581 and indicates EEr (external monitoring).

- The function can be controlled by four inputs
  – Control word CAN-CTRL bit 10 of CAN-IN1
  – Control word AIF-CTRL bit 10 of AIF-IN
  – Control word C0135 bit 10
  – Free input DCTRL-TRIP-SET
- All inputs are linked by an OR-operation.

7.6.21.5 TRIP-RESET

Resets an active trip, after the cause of fault is reset. If the cause of fault is still active, there is no reaction.

- The function can be controlled by four inputs
  – Control word CAN-CTRL bit 11 of CAN-IN1
  – Control word AIF-CTRL bit 11 of AIF-IN
  – Control word C0135 bit 11
  – Free input DCTRL-TRIP-RESET
- All inputs are linked by an OR-operation.
- The function can only be performed by a LOW-HIGH edge of the signal resulting from the OR operation.

Tip!

If one of the inputs is set to HIGH, no LOW-HIGH edge can occur at the resulting signal.

7.6.21.6 Change of parameter set (PAR)

The controller loads and uses the selected parameter set.

- The parameter set to be loaded is selected via the inputs DCTRL-PAR*1 and DCTRL-PAR*2. The inputs are binary coded (1 of 4).

PAR*2	PAR*1	Selected parameter set
0	0	Parameter set 1
0	1	Parameter set 2
1	0	Parameter set 3
1	1	Parameter set 4

- With a LOW-HIGH - signal at the input DCTRL-PAR-LOAD the controller changes to the selected parameter set.

Tip!

If the parameter set to be loaded via terminal X5/Ex is selected before connecting the supply voltage, the LOW-HIGH signal at the input DCTRL-PAR-LOAD is not necessary. In this case, the controller loads automatically the selected parameter set.

- The controller is not ready to operate for approx. 1 second. DCTRL- RDY shows LOW during this time.

7.6.21.7 Controller state

The state is binary coded in the outputs DCTRL-STAT*x.

STAT*8	STAT*4	STAT*2	STAT*1	Action of the controller
0	0	0	0	Initialization after connection of the supply voltage
0	0	0	1	Lock mode, Protection against restart active C0142
0	0	1	1	Drive is in controller inhibit mode
0	1	1	0	Controller enabled
0	1	1	1	The release of a monitoring function resulted in a ”message”
1	0	0	0	The release of a monitoring function resulted in a ”trip”

7.6.22 Digital frequency input (DFIN)

Purpose

Conversion and standardization of a power pulse current at the digital frequency input X9 into a speed and phase setpoint. The transmission of a digital frequency is very precise (without offset and gain errors).

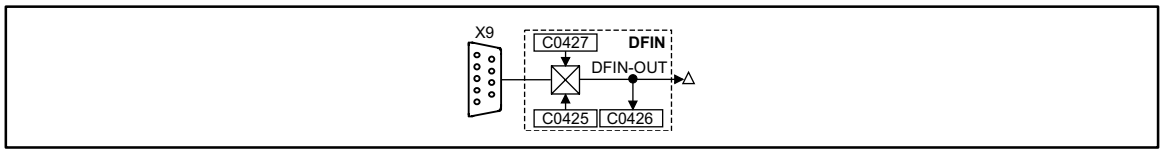

Fig. 7-77 Digital frequency input (DFIN)

Signal				Source		Note
Name	Type	DIS	DIS format	CFG	List	
DFIN-OUT	phd	C0426	dec [rpm]	-	-	

Function

- The input X9 is dimensioned for signals with TTL level (see chapter 4.2.8 digital frequency input X9).
- Adapt the controller to the connected encoder or controller, in the event of pulse train cascade or pulse train bus under C0425.
- The input of a zero track is optional.
- The evaluation of the following input signals is possible under C0427:

C0427 = 0

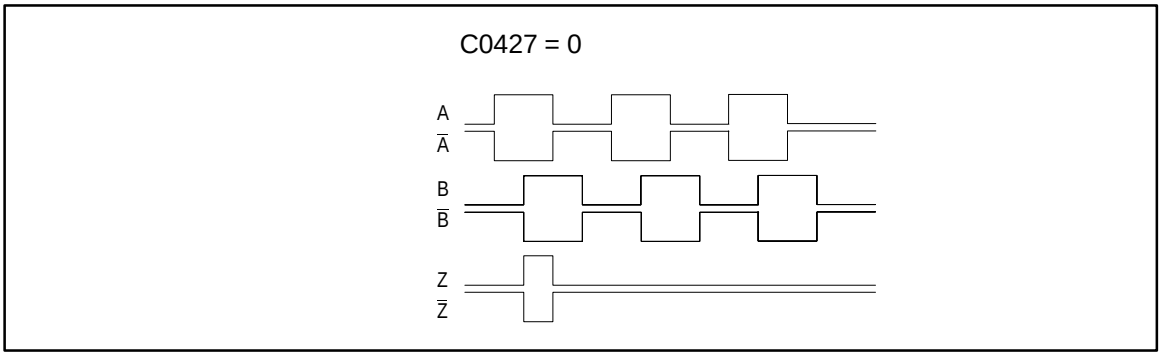

Fig. 7-78 Signal sequence with phase shift (CW rotation)

- CW rotation
  – Track A is leading track B by 90° (positive value at DFIN-OUT).
- CCW rotation
  – Track A is lagging behind track B by 90° (negative value at DFIN-OUT).

C0427 = 1

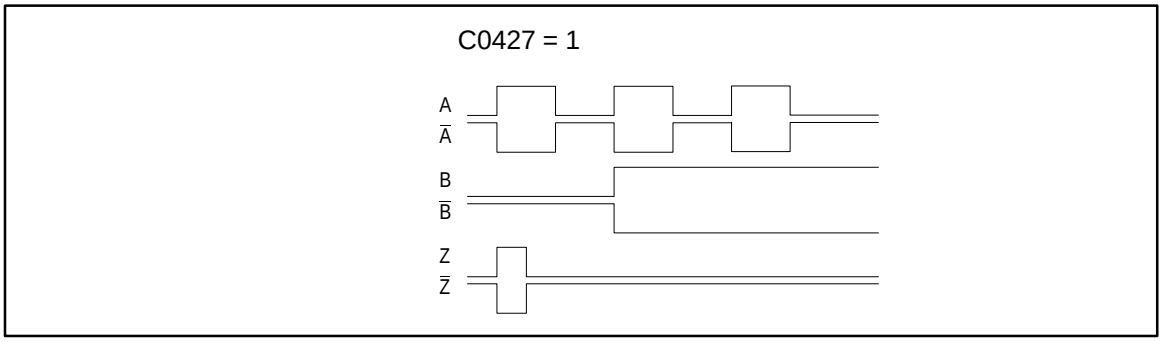

Fig. 7-79 Control of the direction of rotation by track B

- CW rotation
  – Track A transmits the speed.
  – Track B=LOW (positive value at DFIN-OUT).
- CCW rotation
  – Track A transmits the speed.
  – Track B=HIGH (negative value at DFIN-OUT).

C0427 = 2

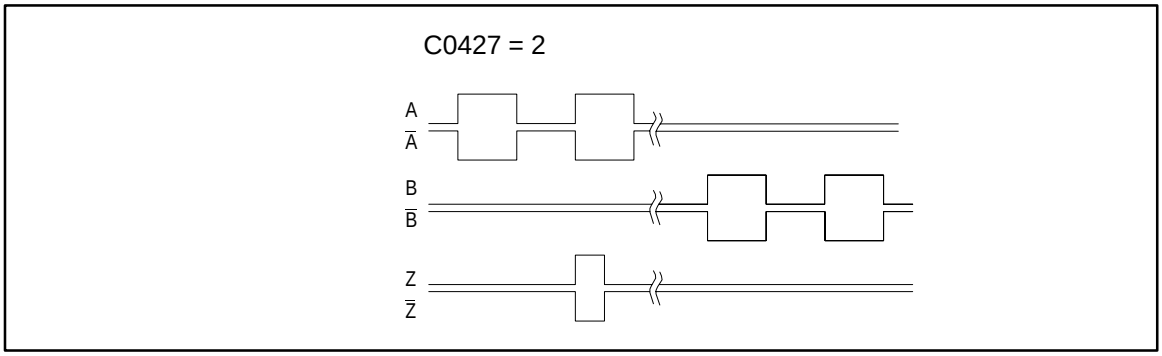

Fig. 7-80 Control of speed and direction of rotation via track A or track B

- CW rotation
  – Track A transmits the speed and the direction of rotation (positive value at DFIN-OUT).
  – Track B=LOW
- CCW rotation
  – Track B transmits the speed and the direction of rotation (negative value at DFIN-OUT).
  – Track A=LOW

Transmission function

$$\text{DFIN-OUT [rpm]} = \text{f [Hz]} \cdot \frac{60}{\text{Increments_from_C0425}}$$

Example:

Input frequency = 200 kHz

C0425 = 3 (≙ of an increment of 2048 inc/rev)

$$\text{DFIN-OUT [rpm]} = 200000\ \text{Hz} \cdot \frac{60}{2048} = 5859\ \text{rpm}$$

Signal adaptation

Finer resolutions than the squaring can be achieved by connecting an FB (e.g. CONV3 or CONV4).

Example:

The FB CONV3 converts the speed signal into a quasi-analog signal.

The conversion is done according to the formula:

$$\text{CONV3} - \text{OUT}\,[\%] = f\,[\text{Hz}] \cdot \frac{0,4}{\text{Increments_from_C0425}} \cdot \frac{\text{C0950}}{\text{C0951}}$$

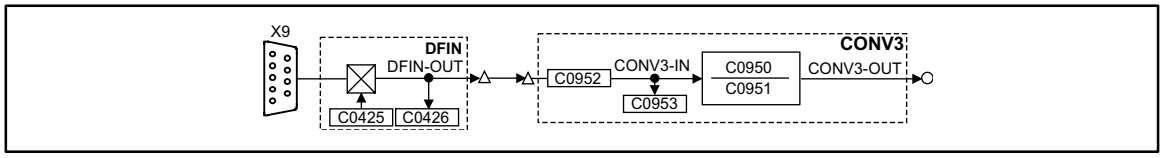

Fig. 7-81 Digital frequency input (DFIN) with connected converter

Stop!

When C0540 = 0, 1, 2, 3 and feedback system C0025 > 10, you must no longer use the digital frequency input X9.

7.6.23 Digital frequency ramp generator (DFRFG)

Purpose

This function block is used to synchronize the drive (motor shaft) on a digital frequency (phase input). Then, the drive performs a phase-synchronous running to the digital frequency.

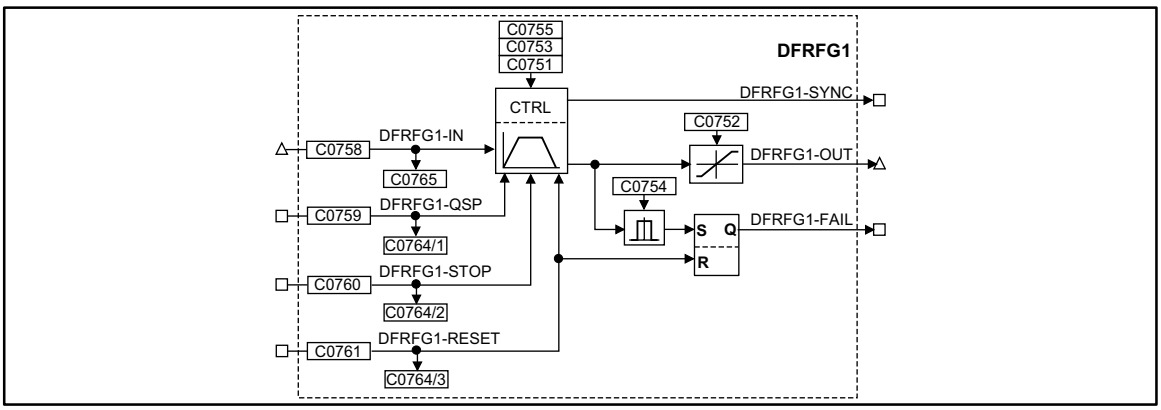

Fig. 7-82 Function block digital frequency ramp generator (DFRFG)

Signal				Source			Note
Name	Type	DIS	DIS format	CFG	List	Lenze	
DFRFG1-IN	phd	C0765	dec [rpm]	C0758	4	1000	Speed/Phase setpoint
DFRFG1-QSP	d	C0764/1	bin	C0759	2	1000	HIGH = quick stop
DFRFG1-STOP	d	C0764/2	bin	C0760	2	1000	HIGH = save setpoint
DFRFG1-RESET	d	C0764/3	bin	C0761	2	1000	HIGH = reset
DFRFG1-OUT	phd	-	dec [rpm]	-	-	-	Speed/Phase setpoint
DFRFG1-SYNC	d	-	bin	-	-	-	HIGH = drive runs synchronously
DFRFG1-FAIL	d	-	bin	-	-	-	HIGH = phase difference exceeded

Function

- Profile generator
- Quick stop
- Ramp generator stop
- RESET
- Detect phase difference

7.6.23.1 Profile generator

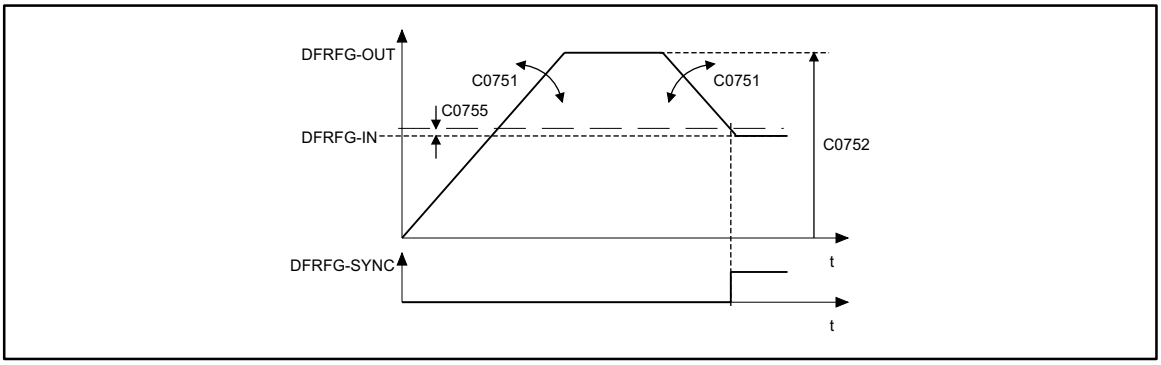

Fig. 7-83 Synchronize on DFRFG

The profile generator generates ramps by which the phase setpoint is led to its target.

- Acceleration and deceleration time can be set under C0751
- Maximum speed can be set under C0752
- When the distance and speed setpoint are reached, the output DFRFG1-SYNC is set to HIGH. At the same time, the profile generator is deactivated.
- Setting of the change-over point under C0755

Stop!

The drive must not be operated at its torque limit.

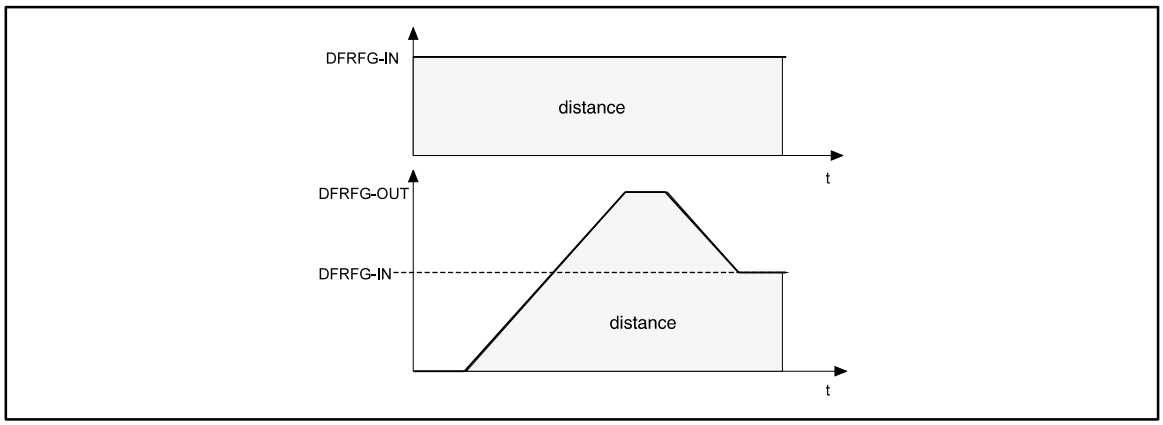

Fig. 7-84 Speed diagram DFRFG

The target is defined by the number of increments at DFRFG-IN (master) and can be represented as a distance. In the speed-time diagram, the distance covered (phase) is shown as the area under the speed profile. When synchronization is reached, master and slave have covered the same distance (phase).

7.6.23.2 Quick stop

The drive can be removed from the network and can be decelerated to standstill.

- Activation with DFRFG-QSP = HIGH
- Deceleration time can be set under C0753
- The set phase detected at DFRFG-IN is saved.
- After reset of the quick stop request the set phase is reached via the profile generator.

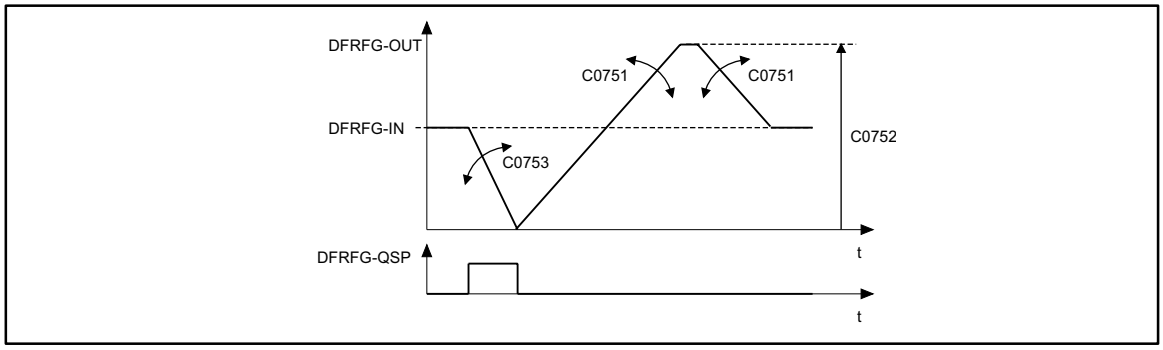

Fig. 7-85 Quick stop DFRFG

7.6.23.3 Ramp generator stop

The ramp of the profile generator can be stopped during operation:

- Activation with DFRFG-STOP = HIGH
- Then, the last state of DFRFG-OUT is output.
- The set phase detected at DFRFG-IN is saved.
- After reset of the quick stop request the set phase is reached via the profile generator.

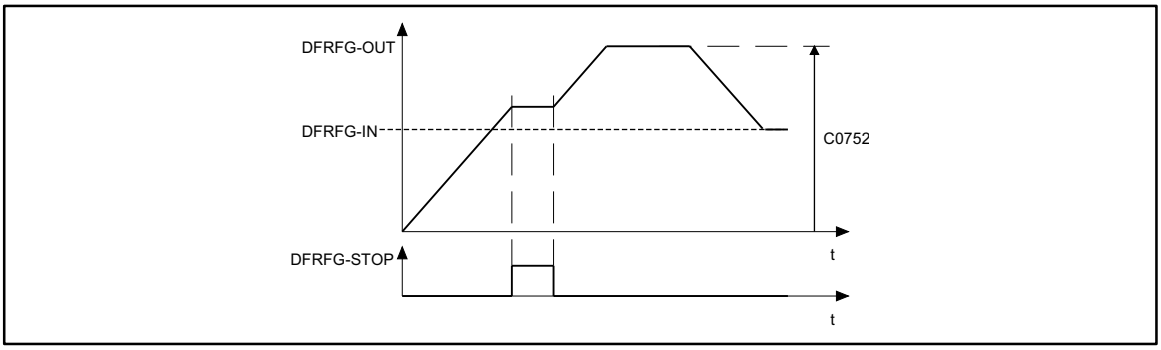

Fig. 7-86 Ramp generator stop

7.6.23.4 RESET

DFRFG-RESET = HIGH:

- resets the internally added set phase
- The profile generator is activated
- The set phase is detected again as from the LOW signal at this input.

7.6.23.5 Detect phase difference

The phase difference between input DFRFG-IN and output DFRFG-OUT can be monitored.

- Limit value of the monitoring can be set under C0754
- DFRFG-FAIL = HIGH if the limit value is reached
- The signal is saved until the input DFRFG-RESET is set to HIGH.
- The profile generator can accept a phase difference of up to ±2140000000 inc (= 32000 revolutions).

7.6.24 Digital frequency processing (DFSET)

Purpose

This function block is used to condition the digital frequency for the controller. Stretch factor, gearbox factor, or phase trimming can be provided here.

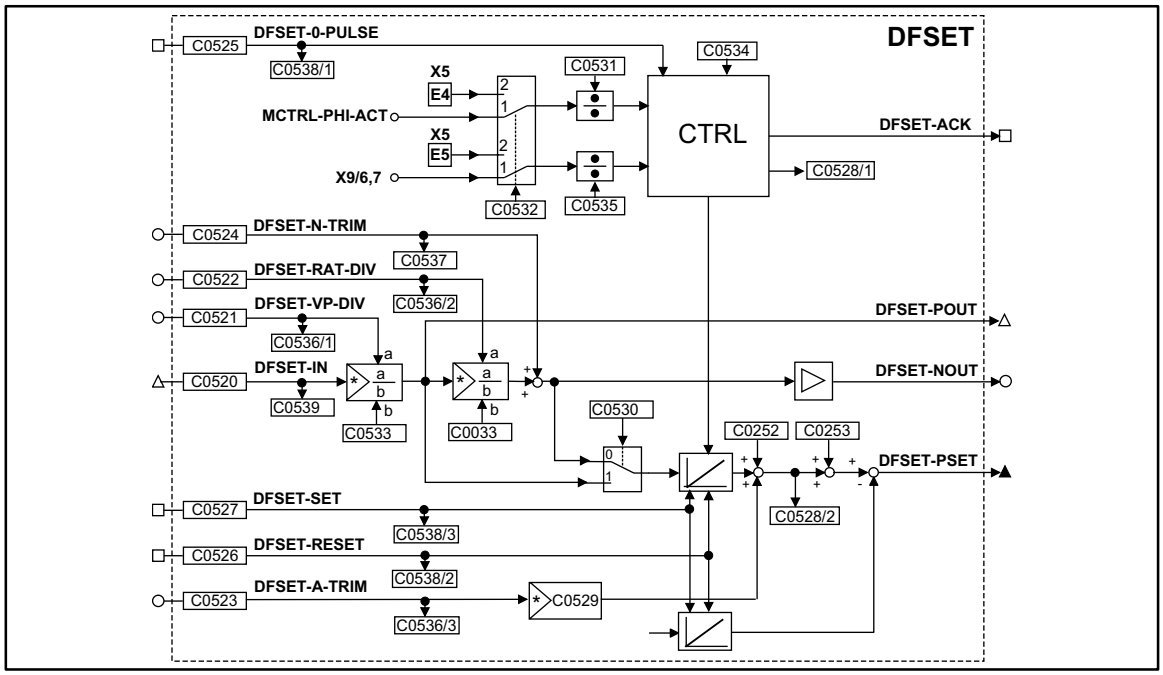

Fig. 7-87 Function block digital frequency processing (DFSET)

Signal				Source			Note
Name	Type	DIS	DIS format	CFG	List	Lenze	
DFSET-IN	phd	C0539	dec [rpm]	C0520	4	1000	Speed/Phase setpoint
DFSET-N-TRIM	a	C0537	dec [%]	C0524	1	1000	Speed trimming in % of C0011
DFSET-A-TRIM	a	C0536/3	dec [inc]	C0523	1	1000	Phase trimming 100% = 16384 inc
DFSET-VP-DIV	a	C0536/1	dec	C0521	1	1000	Numerator stretch factor 100% = 16384 inc
DFSET-RAT-DIV	a	C0536//2	dec	C0522	1	1000	Numerator gearbox factor 100% = 16384 inc
DFSET-0-PULSE	d	C0538/1	bin	C0525	2	1000	HIGH = Enabling of zero pulse synchronizing
DFSET-SET	d	C0538/3	bin	C0527	2	1000	HIGH = Set phase integrators to equal values
DFSET-RESET	d	C0538/2	bin	C0526	2	1000	HIGH = sets position difference = 0
DFSET-NOUT	a	-	dec [%]	-	-	-	in % of nmax (C0011)
DFSET-POUT	phd	-	dec [rpm]	-	-	-	Speed/Phase setpoint
DFSET-PSET	ph	-	dec [inc]	-	-	-	Phase setpoint for phase controller
DFSET-ACK	d	-	bin	-	-	-	HIGH = Synchronizing is performed

Function

- Setpoint conditioning with stretch and gearbox factor
- Processing of correction values
- Synchronizing on zero track or touch probe

7.6.24.1 Setpoint conditioning

Stretch factor

This is used to set the ratio between the drive and the setpoint.

- The setpoint of DFSET-IN is evaluated with the stretch factor and is output again to DFSET-POUT.
- The stretch factor is formed by the numerator and the denominator:
  – Numerator is variable from analog signal source or fixed value by the code.
  – Denominator is fixed by C0533.
- Relationship:

$$\text{DFSET–POUT} = \text{DFSET–IN} \cdot \frac{\text{DFSET–VP–DIV}}{\text{C0533}}$$

Gearbox factor

The adaptation can also be carried out via the gearbox factor. The gearbox factor can be used to set the gearbox ratio of the drive.

- The setpoint to DFSET-IN * stretch factor is evaluated with the gearbox factor is output again to DFSET-NOUT.
- The gearbox factor is formed by the numerator and the denominator:
  – Numerator is variable from analog signal source or fixed value by the code.
  – Denominator is fixed by C0033.
- Relationship:

$$\text{DFSET–NOUT} = \text{DFSET–IN} \cdot \frac{\text{DFSET–VP–DIV}}{\text{C0533}} \cdot \frac{\text{DFSET–RAT–DIV}}{\text{C0033}}$$

7.6.24.2 Processing of correction values

Speed trimming

An additional setpoint can be added to the speed setpoint via DFSET-N-TRIM. This input is used to add correction values, e.g. by a superimposed closed-loop control.

- Using this feature, the drive can be accelerated or decelerated.

Phase trimming

An additional setpoint can be added to the phase setpoint via DFSET-A-TRIM. This changes the rotor position to the setpoint with the provided number of increments (leading or lagging). The phase trimming can be carried out in the range of ±32767 (i.e. ±1/2 revolution). Here, every analog source can be used as a signal source.

- The value is entered in increments; a revolution corresponds to 65535 increments.
- When analog values are entered, 100% correspond to a 1/4 revolution = 16384 increments.
- The setting range can be extended under code C0529 by setting a multiplier.

Phase offset

Under code C0252, a fixed phase offset can be added to the setpoint of the drive.

Speed-proportional phase setting

In some applications it is necessary that the phase leads or lags with increasing speed.

- Enter a suitable setting in increments under code C0253.
- The set phase setting is obtained if the drive operates with maximum speed (linear relationship).

7.6.24.3 Synchronization on zero track or touch probe

A synchronizing on individual pulses is done depending on code C0352 to:

- zero track of digital frequency input X9 and zero track by the feedback system set under C0490.
- via terminals X5/E4 (actual pulse) and X5/E5 (set pulse).

Stop!

When the synchronization via terminals X5/E4 and X5/E5 (C0532=2) is activated, make sure that no other control signals are taken from these terminals. The terminals are provided with a base setting during the configuration change-over C0005.

- The synchronization must be activated via the input DFSET-0-PULSE = HIGH.

Synchronization mode

For the synchronization, different modes are available which can be set under C0534:

C0534	Synchronization mode	Note
0	inactive	function inactive
1	continuous synchronization with correction in CW rotation	
2	continuous synchronization with correction in CCW rotation	
10	single synchronization, a phase deviation is corrected in the shortest possible way	after a LOW-HIGH signal to DFSET-0-pulse, the zero track is synchronized once
11	single synchronization, a phase deviation is corrected in CW direction	
12	single synchronization, a phase deviation is corrected in CCW direction	
13	single synchronization, a phase difference is determined between setpoint pulse and actual pulse and is corrected to the corresponding direction of rotation according to the sign	

7.6.25 Digital frequency output (DFOUT)

Purpose

Converts internal speed signals into frequency signals and outputs them to subsequent drives.The transmission is very precise (without offset and gain errors).

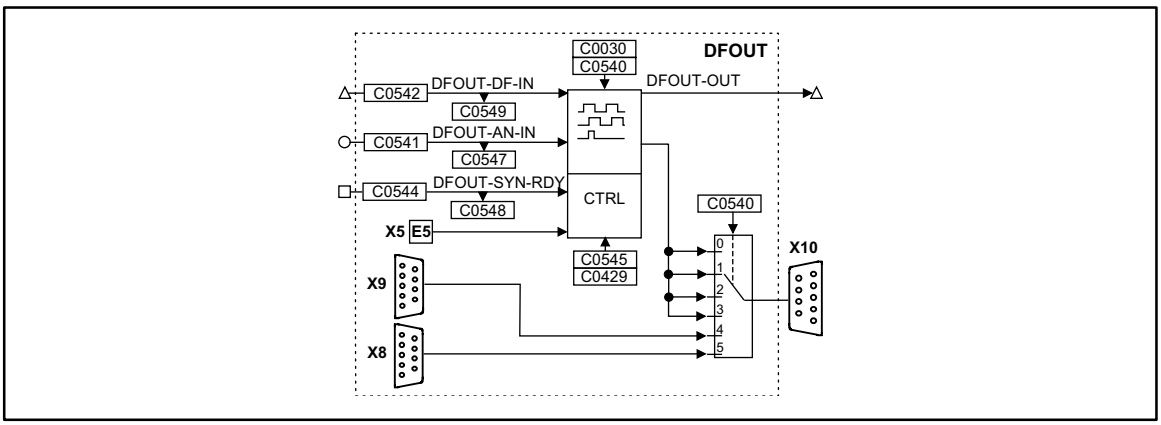

Fig. 7-88 Digital frequency output (DFOUT)

Signal				Source		Note
Name	Type	DIS	DIS format	CFG	List	
DFOUT-DF-IN	phd	C0549	dec [rpm]	C0542	4	-
DFOUT-AN-IN	a	C0547	dec [%]	C0541	1	Input in [%] of nmax (C0011)
DFOUT-SYN-RDY	d	C0548	bin	C0544	2	-
DFOUT-OUT	phd	-	-	-	-	-

Function

- Output signals on X10
- Output of an analog signal
- Output of a speed signal
- Encoder simulation of the resolver with internal zero track
- Encoder simulation of the resolver with external zero track
- Direct output of X8
- Direct output of X9

7.6.25.1 Output signals on X10

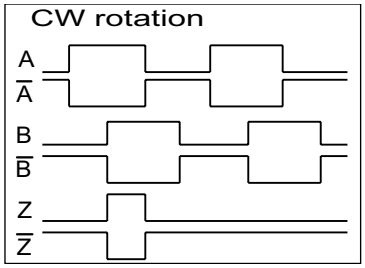

Fig. 7-89 Signal sequence for CW rotation (definition)

- The output signal corresponds to the simulation of an incremental encoder:
  – Track A, track B and the zero track (if necessary) as well as the corresponding inverted tracks are output with tracks shifted by 90 degree.
  – The levels are TTL compatible.
- The signal sequence in the diagram occurs if the input values are positive (CW rotation).
- If the input values are negative (CCW rotation), track B leads track A by 90 5 .
- The zero pulse is output according to the function set under C0540.
- C0030 is used to set the encoder constant of the encoder simulation.
- The function of the digital frequency output X10 is determined via C0540.

Stop!

C0540 = 0 to C0540 = 3 cannot be set if the connection to the digital frequency input DFIN X9 is made and C0025 > 10 was selected.

[C0540]	Signal at X10
0	DFOUT-AN-IN is output at X10; external input of the zero track is possible
1	DFOUT-DF-IN is output at X10; external input of the zero track is possible
2	Encoder simulation of the resolver with zero track in resolver zero track (mechanical assembly to the motor)
3	Encoder simulation of the resolver with external input of the zero track (terminal X5/E5)
4	The signal at input X9 is amplified electrically and is output directly (C0030 is without function)
5	The signal at input X8 is amplified electrically and is output directly (C0030 is without function)

7.6.25.2 Output of an analog signal

For this, code C0540 must be set to 0. The value applied at input DFOUT-AN-IN is converted into a frequency.

Transmission function

$$f\,[\mathrm{Hz}] = \mathrm{DFOUT-AN-IN}\,[\%] \cdot \frac{\text{Increments from C0030}}{100} \cdot \frac{\mathrm{C0011}}{60}$$

Example:

DFOUT-AN-IN = 50 %

C0030 = 3, this corresponds to 2048 inc/rev.

C0011 = 3000 rpm

$$f\,[\mathrm{Hz}] = 50\,\% \cdot \frac{2048}{100} \cdot \frac{3000}{60} = 51200\ \mathrm{Hz}$$

Generate zero pulse

An artificail zero pulse can be generated for the output frequency.

- Set input DFOUT-SYN-RDY = HIGH.
- A LOW-HIGH edge at terminal X5/E5 generates the zero pulse 360° later.
  – Then, a zero pulse is generated every 360° according to C0030.
- The zero pulse can be shifted by +360° under C0545 (65536 inc = 360°).

7.6.25.3 Output of a speed signal

- Set C0540 = 1.
  – This setting converts the value applied at input DFOUT-DF-IN into a frequency only.

Transmission function

$$f\,[\mathrm{Hz}] = \mathrm{DFOUT-DF-IN}\,[\mathrm{rpm}] \cdot \frac{\text{Increments from C0030}}{60}$$

Example:

DFOUT-DF-IN = 3000 rpm

C0030 = 3, this corresponds to 2048 inc/rev.

$$f\,[\mathrm{Hz}] = 3000\ \mathrm{rpm} \cdot \frac{2048}{60} = 102400\ \mathrm{Hz}$$

Generate zero pulse

An artificail zero pulse can be generated for the output frequency.

- Set input DFOUT-SYN-RDY = HIGH.
- A LOW-HIGH edge at terminal X5/E5 generates the zero pulse 360° later.
  – Then, a zero pulse is generated every 360° according to C0030.
- The zero pulse can be shifted by +360° under C0545 (65536 inc = 360°).

7.6.25.4 Encoder simulation of the resolver

Set C0540 = 2 or C0540 = 3 (depending on the desired generation of the zero track).

- The function is used if a resolver is connected to X7.
- The encoder constant for output X10 is set under C0030.

Generate zero pulse in resolver zero position (C0540 = 2)

The output of the zero pulse referring to the motor depends on how the resolver is attached to the motor.

- The zero pulse can be shifted by +360 under C0545 (65536 inc = 360°).

Generate zero pulse externally (C0540 = 3)

An artificail zero pulse can be generated for the output frequency.

- Set input DFOUT-SYN-RDY to HIGH.
- A LOW-HIGH edge at terminal X5/E5 generates the zero pulse 360° later.
  – Then, a zero pulse is generated every 360 according to C0030.
- The zero pulse can be shifted by +360 under C0545 (65536 inc = 360°).

7.6.25.5 Direct output of X8 (C0540 = 4)

- The input signal at X8 is amplified electrically and output directly.
- The signals depend on the assignment of input X8.
- C0030 and C0545 have no function.
- The zero track is output only if it is connected to X8.

7.6.25.6 Direct output of X9 (C0540 = 5)

- The input signal at X9 is amplified electrically and output directly.
- The signals depend on the assignment of input X9.
- C0030 and C0545 have no function.
- The zero track is output only if it is connected to X9.

7.6.26 Delay elements (DIGDEL)

Purpose

This function is used to delay digital signals. These operations can be used for the control of functions or the generation of status information.

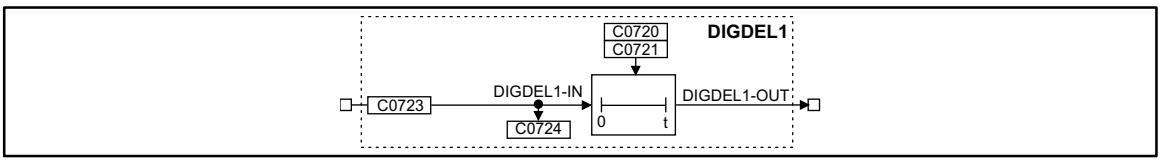

Fig. 7-90 Delay element (DIGDEL1)

Signal				Source			Note
Name	Type	DIS	DIS format	CFG	List	Lenze	
DIGDEL1-IN	d	C0724	bin	C0723	2	1000	-
DIGDEL1-OUT	d	-	-	-	-	-	-

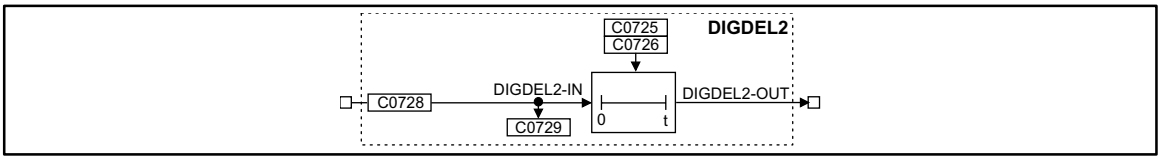

Fig. 7-91 Delay element (DIGDEL2)

Signal				Source			Note
Name	Type	DIS	DIS format	CFG	List	Lenze	
DIGDEL2-IN	d	C0729	bin	C0728	2	1000	-
DIGDEL-OUT	d	-	-	-	-	-	-

Function

You can select the following functions under C0720 (DIGDEL1) and C0725 (DIGDEL2):

- on-delay
- dropout delay
- general delay

7.6.26.1 On-delay

If the on-delay is set, a signal change at the input DIGDELx-IN from LOW to HIGH is passed on to the DIGDELx-OUT output after the delay time set under C0721 or C0726 has elapsed.

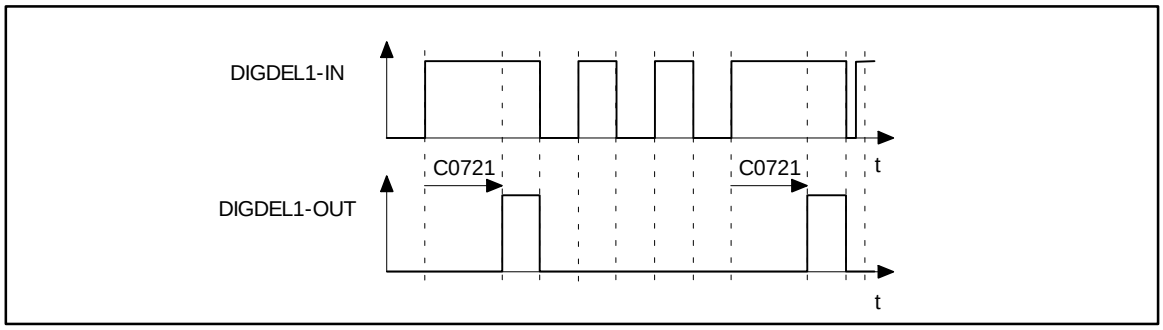

Fig. 7-92 On-delay (DIGDEL1)

In this function, the time-element operates like a retriggerable monoflop:

- A LOW-HIGH edge at the input DIGDELx-IN starts the time element.
- If the delay time set under C0721 or C0726 has elapsed, the output DIGDELx-OUT is set to HIGH.
- The time element is reset and the output DIGDELx-OUT is set to LOW with a HIGH-LOW edge at the input DIGDELx-IN.

7.6.26.2 Dropout delay

A dropout delay causes a signal change at the input DIGDELx-IN from HIGH to LOW to be passed on to the output DIGDELx-OUT if the delay time set under C0721 or C0726 has elapsed.

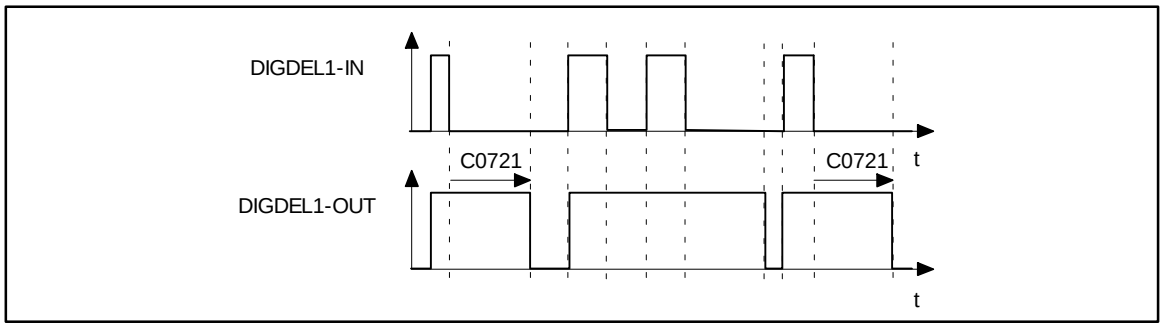

Fig. 7-93 Dropout delay (DIGDEL1)

- A LOW-HIGH edge at the input DIGDELx-IN causes the output DIGDELx-OUT to be set to HIGH and the time element to be reset.
- The time element is started with a HIGH-LOW edge at the input DIGDELx-IN.
- After the delay time set under C0721 or C0726 has elapsed, the output DIGDELx-OUT is set to LOW.

7.6.26.3 General delay

A general delay causes any signal change at the input DIGDELx-IN to be passed to the output DIGDELx-OUT only after the time set under C0721 or C0726 has elapsed.

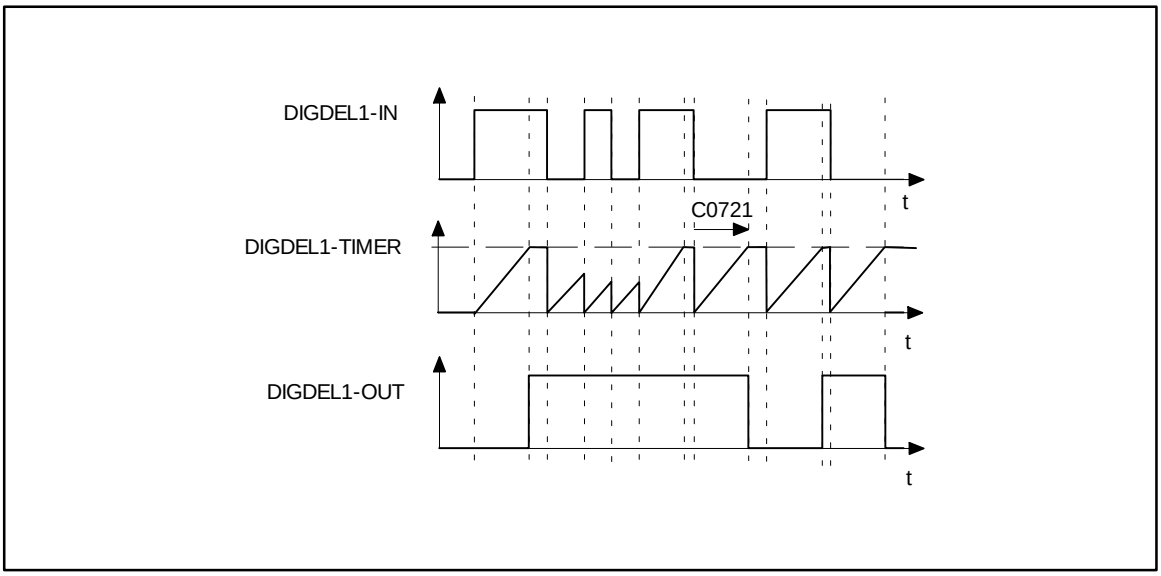

Fig. 7-94 General delay

- The time element is started with any edge at the input DIGDELx-IN.
- When the timer (can be set under C0721 or C0726) has reached the upper limit, the output DIGDELx-OUT is set to the same value as the input DIGDEL1-IN.

7.6.27 Freely assignable digital inputs (DIGIN)

Purpose

Reading and conditioning of the signals at the terminals X5/E1 to X5/E5.

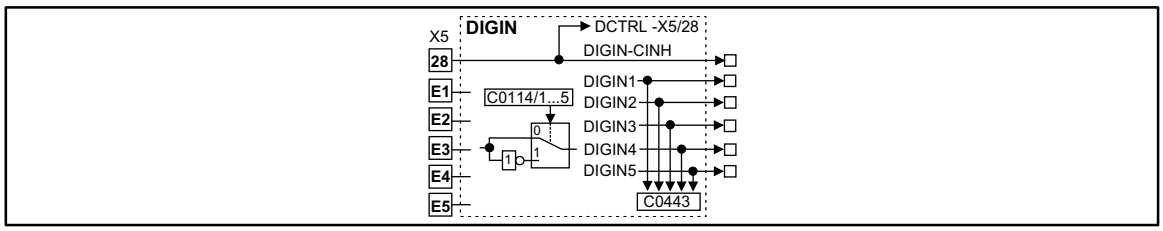

Fig. 7-95 Freely assignable digital inputs (DIGIN)

Signal				Source			Note
Name	Type	DIS	DIS format	CFG	List	Lenze	
DIGIN-CINH	d	-	dec	-	-	-	Controller inhibit acts directly on the DCTRL control
DIGIN1	d	C0443	dec	-	-	-	-
DIGIN2	d	C0443	dec	-	-	-	-
DIGIN3	d	C0443	dec	-	-	-	-
DIGIN4	d	C0443	dec	-	-	-	-
DIGIN5	d	C0443	dec	-	-	-	-

Function

The terminals X5/E1 to X5/E5 are scanned every millisecond. The level for every input can be inverted. For this, proceed as follows:

- Select code C0114 with corresponding subcode (e.g. subcode 3 for input X5/E3)
- Enter the desired level as a parameter:
  – 0 = Level not inverted (HIGH active)
  – 1 = Level inverted (LOW active)

7.6.28 Freely assignable digital outputs (DIGOUT)

Purpose

Conditioning of the digital signals and output to the terminals X5/A1 to X5/A4.

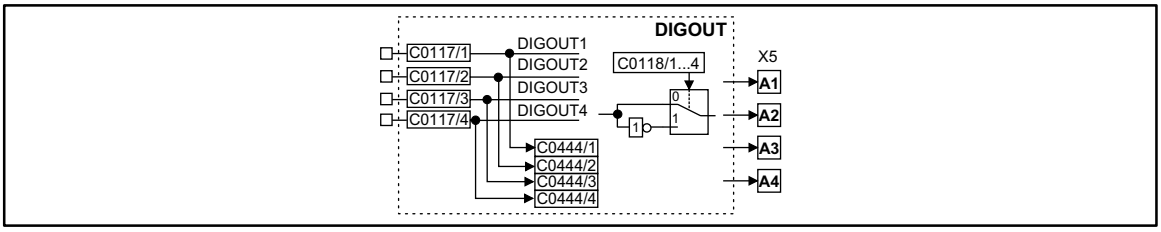

Fig. 7-96 Freely assignable digital outputs (DIGOUT)

Signal				Source			Note
Name	Type	DIS	DIS format	CFG	List	Lenze	
DIGOUT1	d	C0444/1	bin	C0117/1	2	15000	-
DIGOUT2	d	C0444/2	bin	C0117/2	2	10650	-
DIGOUT3	d	C0444/3	bin	C0117/3	2	500	-
DIGOUT4	d	C0444/4	bin	C0117/4	2	5003	-

Function

The terminals X5/A1 to X5/A4 are updated every millisecond. The level for every output can be inverted. For this, proceed as follows:

- Select code C0118 with corresponding subcode (e.g. subcode 3 for output X5/A3)
- Enter the desired level as a parameter:
  – 0 = Level not inverted (HIGH active)
  – 1 = Level inverted (LOW active)

7.6.29 First order derivative-action element (DT1)

Purpose

Derivative action of signals

For instance, used for the speed injection (dv/dt).

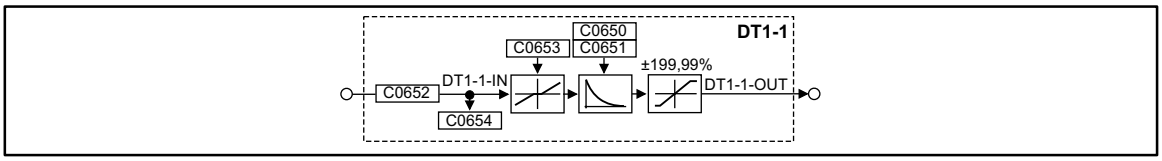

Fig. 7-97 First order derivative-action element (DT1-1)

Signal				Source			Note
Name	Type	DIS	DIS format	CFG	List	Lenze	
DT1-1-IN	a	C0654	dec [%]	C0652	1	1000	-
DT1-1-OUT	a	-	-	-	-	-	limited to ±199.99 %

Function

- The gain is set under C0650.
- The delay $T_V$is set under C0651.
- The input sensitivity of the DT1-1 element can be reduced under C0653.
- The FB only evaluates the specified most significant bits, according to the setting.

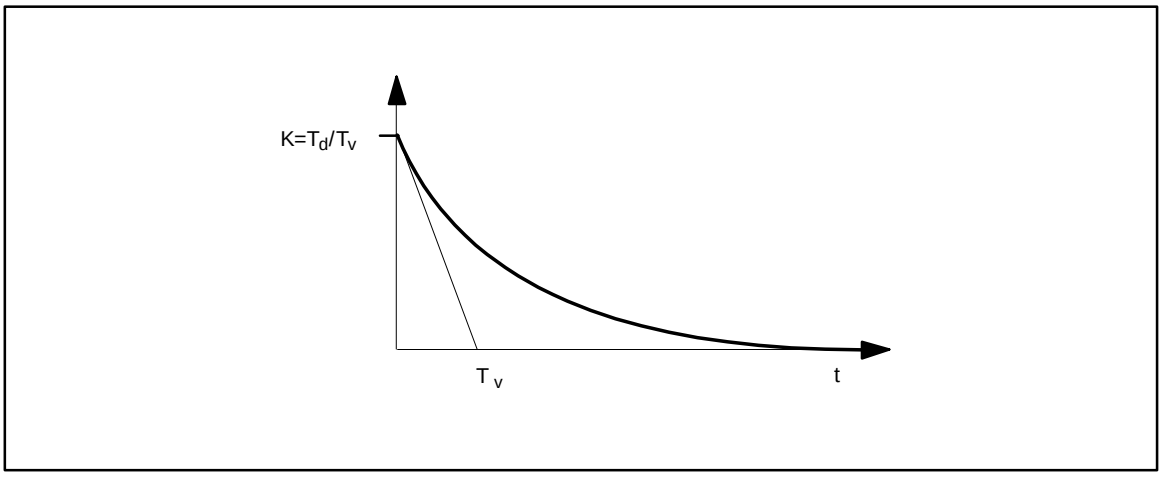

Fig. 7-98 Delay time T_v of the first order derivative-action element

7.6.30 Free piece counter (FCNT)

Purpose

Digital up/down counter.

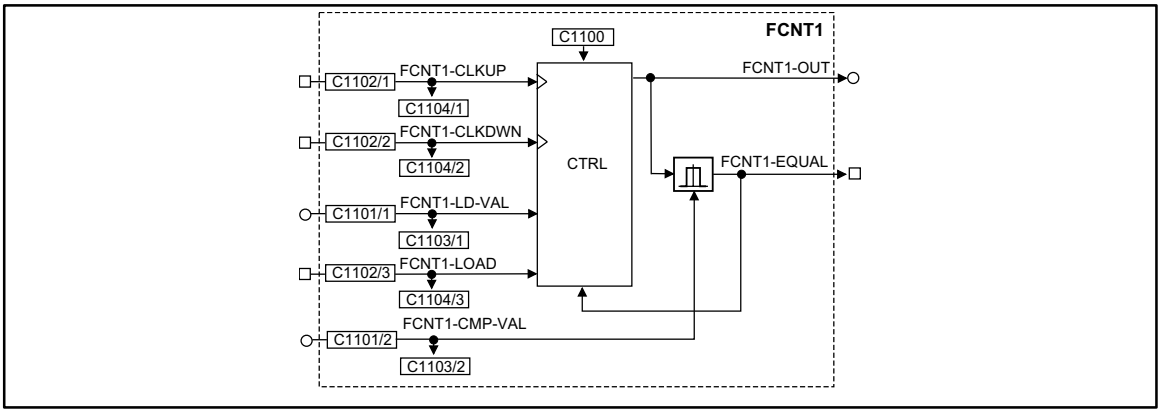

Fig. 7-99 Free piece counter (FCNT1)

Signal				Source		Note
Name	Type	DIS	DIS format	CFG	List	
FCNT1-CLKUP	d	C1104/1	bin	C1102/1	2	LOW-HIGH edge = counts up by 1
FCNT1-CLKDWN	d	C1104/2	bin	C1102/2	2	LOW-HIGH edge = counts down by 1
FCNT1-LD-VAL	a	C1103/1	dec	C1101/1	1	Start value
FCNT1-LOAD	d	C1104/3	bin	C1102/3	2	• HIGH = Accept start value • The input has the highest priority
FCNT1-CMP-VAL	a	C1103/2	dec	C1101/2	1	Comparison value
FCNT1-OUT	a	-	-	-	-	Counter limited to ±199.99 % (≙ ±32767)
FCNT1-EQUAL	d	-	-	-	-	HIGH = comparison value reached

Function

C1100 = 1

- For | counter | ≥ | FCNT1-CMP-VAL | (comparison value):
  – For 1 ms FCNT1-EQUAL = HIGH
  – Resets the counter to the start value (FCNT1-LD-VAL)

Tip!

If the signal is to be set for a longer time, e.g. when the output is requested by a PLC, you can extend the signal with the TRANS function block.

C1100 = 2

- For | counter | = | FCNT1-CMP-VAL | (comparison value):
  – The counter stops
- FCNT1-LOAD = HIGH resets the counter to the start value (FCNT1-LD-VAL)

7.6.31 Free codes (FCODE)

Purpose

Provision of variable process values which can be linked with function blocks.

- The following FCODE types are available:

Type	Choice			Code example
Phase difference (speed), absolute	-16000	{1 rpm}	16000	C0017
Analog, relative	-199.99	{0.01 %}	199.99	C0026
Analog, absolute	-32767	{1}	32767	C0473
Phase	-2147483648	{1}	2147483648	C0474
Digital, 32-bit	0	{1}	2^{32}	C0471
Digital, 1-bit	0		1	C0250

Tip!

For a detailed list refer to chapter ”Freely assignable codes”. (📖 7-220)

7.6.31.1 FCODE strobe

Purpose

Release of control function when writing to FCODE.

Function

The specified signal sources generate a digital signal when the corresponding FCODE is written.

Signal		Source		Note
Name	Type	CFG	List	
FCODE-ST473/1	d	19400	2	Write access to FCODE C473/1 → pulse with td=1ms
FCODE-ST473/2	d	19400	2	Write access to FCODE C473/2 → pulse with td=1ms
FCODE-ST474/1	d	19400	2	Write access to FCODE C474/1 → pulse with td=1ms
FCODE-ST474/2	d	19400	2	Write access to FCODE C474/2 → pulse with td=1ms

7.6.32 Free digital outputs (FDO)

Purpose

This function block is used to switch digital signals via C0151, via the function block AIF-OUT and via the function block CAN-OUT, to the connected fieldbus systems.

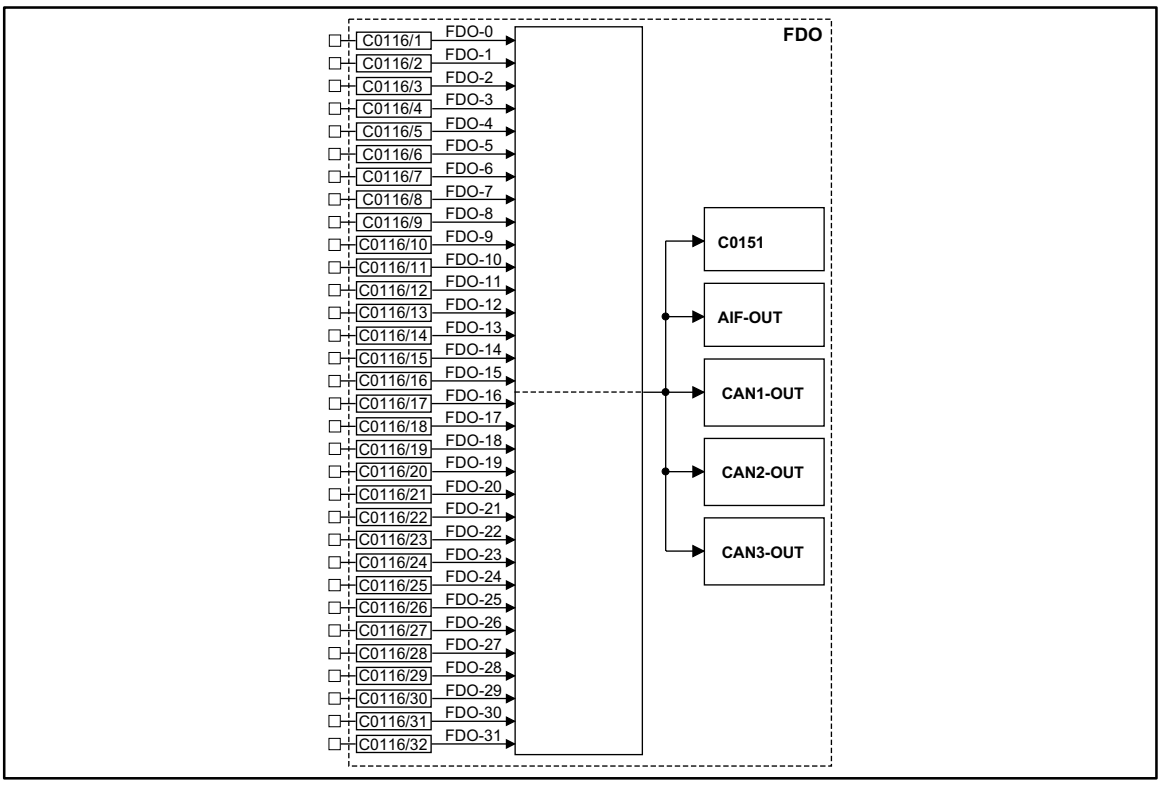

Fig. 7-100 Free digital outputs (FDO)

Signal				Source			Note
Name	Type	DIS	DIS format	CFG	List	Lenze	
FDO-0	d	C0151	hex	C0116/1	2	1000	
FDO-1	d	C0151	hex	C0116/2	2	1000	
FDO-2	d	C0151	hex	C0116/3	2	1000	
FDO-3	d	C0151	hex	C0116/4	2	1000	
FDO-4	d	C0151	hex	C0116/5	2	1000	
FDO-5	d	C0151	hex	C0116/6	2	1000	
FDO-6	d	C0151	hex	C0116/7	2	1000	
FDO-7	d	C0151	hex	C0116/8	2	1000	
FDO-8	d	C0151	hex	C0116/9	2	1000	
FDO-9	d	C0151	hex	C0116/10	2	1000	
FDO-10	d	C0151	hex	C0116/11	2	1000	
FDO-11	d	C0151	hex	C0116/12	2	1000	
FDO-12	d	C0151	hex	C0116/13	2	1000	
FDO-13	d	C0151	hex	C0116/14	2	1000	
FDO-14	d	C0151	hex	C0116/15	2	1000	
FDO-15	d	C0151	hex	C0116/16	2	1000	
FDO-16	d	C0151	hex	C0116/17	2	1000	
FDO-17	d	C0151	hex	C0116/18	2	1000	
FDO-18	d	C0151	hex	C0116/19	2	1000	
FDO-19	d	C0151	hex	C0116/20	2	1000	
FDO-20	d	C0151	hex	C0116/21	2	1000	
FDO-21	d	C0151	hex	C0116/22	2	1000	
FDO-22	d	C0151	hex	C0116/23	2	1000	
FDO-23	d	C0151	hex	C0116/24	2	1000	
FDO-24	d	C0151	hex	C0116/25	2	1000	
FDO-25	d	C0151	hex	C0116/26	2	1000	
FDO-26	d	C0151	hex	C0116/27	2	1000	
FDO-27	d	C0151	hex	C0116/28	2	1000	
FDO-28	d	C0151	hex	C0116/29	2	1000	
FDO-29	d	C0151	hex	C0116/30	2	1000	
FDO-30	d	C0151	hex	C0116/31	2	1000	
FDO-31	d	C0151	hex	C0116/32	2	1000	

Function

You can freely select a digital signal source for every signal input.

- The corresponding bit in the data word (DWORD) is marked with FDO-x (e.g. FDO-0 for the LSB and FDO-31 for the MSB).
- The DWORD is transferred to code C0151 and to the function blocks AIF-OUT, CAN-OUT1, CAN-OUT2, and CAN-OUT3.

7.6.33 Freely assignable input variables (FEVAN)

Purpose

Transfer of analog signals to any code.At the same time, the FB converts the signal to the data format of the target code.

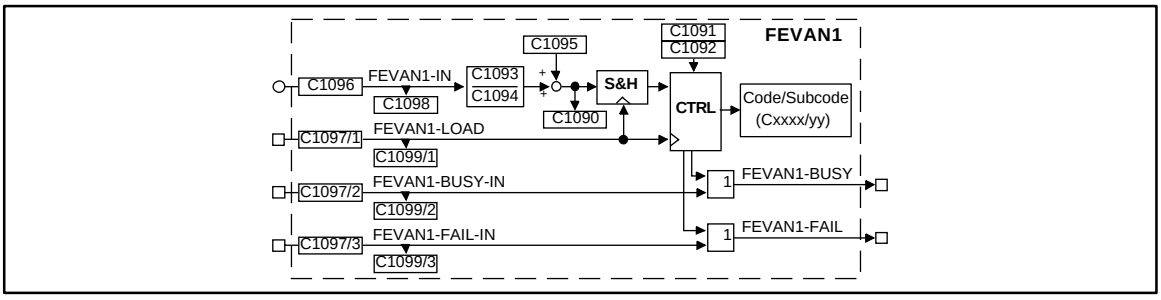

Fig. 7-101 Freely assignable input variables (FEVAN1)

Signal				Source		Note
Name	Type	DIS	DIS format	CFG	List	
FEVAN1-IN	a	C1098	dec	C1096	1	Input value
FEVAN1-LOAD	d	C1099	bin	C1097	2	A LOW-HIGH edge transmits the converted signal to the target code.
FEVAN1-BUSY	d	-	-	-	-	HIGH = transmitting
FEVAN1-FAIL	d	-	-	-	-	● HIGH = transmission failed – A LOW-HIGH edge at FEFAN1-LOAD switches FEFAN1-FAIL = LOW.
-	-	C1090	-	-	-	Display of the converted signal

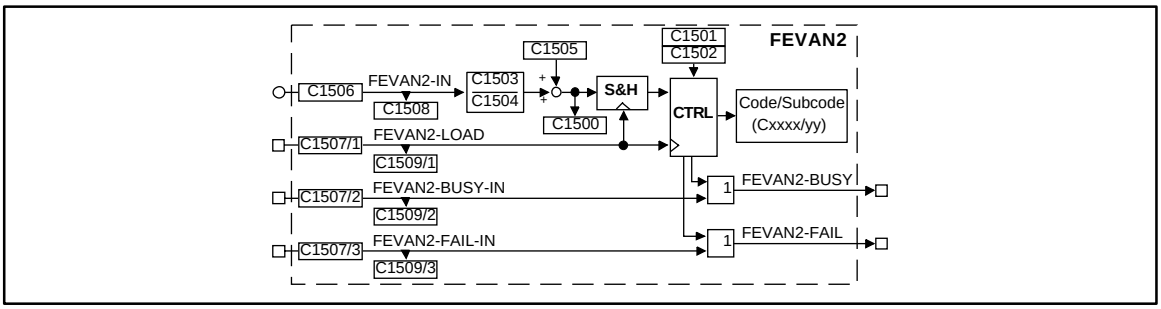

Fig. 7-102 Freely assignable input variables (FEVAN2)

Signal				Source		Note
Name	Type	DIS	DIS format	CFG	List	
FEVAN2-IN	a	C1508	dec	C1506	1	Input value
FEVAN2-LOAD	d	C1509	bin	C1507	2	A LOW-HIGH edge transmits the converted signal to the target code.
FEVAN2-BUSY	d	-	-	-	-	HIGH = transmitting
FEVAN2-FAIL	d	-	-	-	-	● HIGH = transmission failed – A LOW-HIGH edge at FEFAN2-LOAD switches FEFAN2-FAIL = LOW.
-	-	C1500	-	-	-	Display of the converted signal

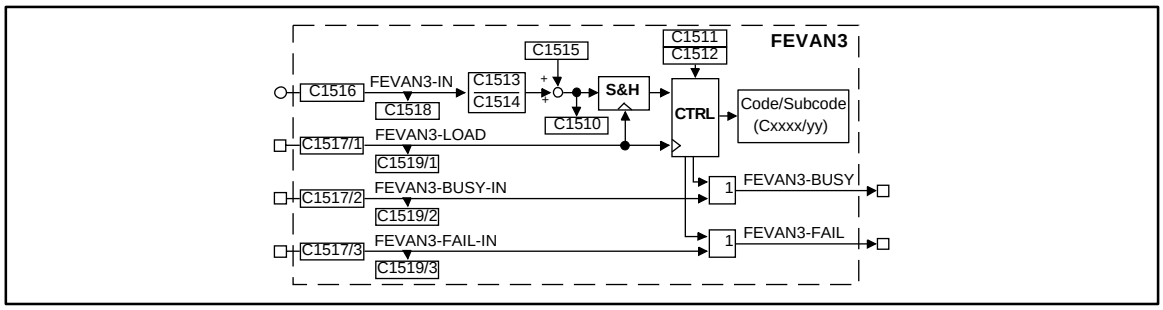

Fig. 7-103 Freely assignable input variables (FEVAN3)

Signal				Source		Note
Name	Type	DIS	DIS format	CFG	List	
FEVAN3-IN	a	C1518	dec	C1516	1	Input value
FEVAN3-LOAD	d	C1519	bin	C1517	2	A LOW-HIGH edge transmits the converted signal to the target code.
FEVAN3-BUSY	d	-	-	-	-	HIGH = transmitting
FEVAN3-FAIL	d	-	-	-	-	● HIGH = transmission failed – A LOW-HIGH edge at FEFAN3-LOAD switches FEFAN3-FAIL = LOW.
-	-	C1510	-	-	-	Display of the converted signal

Function

- Conversion of the read data via:
  – Numerator, denominator
  – Offset
- Selection of a target code for the data read.

Codes for the conversion of the data read and for the selection of the target code:

				Selection of the target code		
Function block	Numerator	Denominator	Offset	Code	Subcode	Examples
FEVAN1	C1093	C1094	C1095	C1091	C1092	
FEVAN2	C1503	C1504	C1505	C1501	C1502	

Data transmission

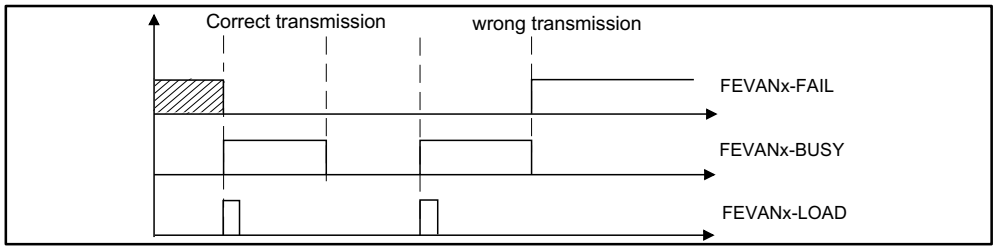

Fig. 7-104 Signal flow

Transmission errors can occur, if:

- the target code is not available
- the target subcode is not available
- the transmitted data are out of the target code limits
- the target code is inhibited since it can only be written if the controller is inhibited.Set controller inhibit (see code table).

Cyclic data transmission

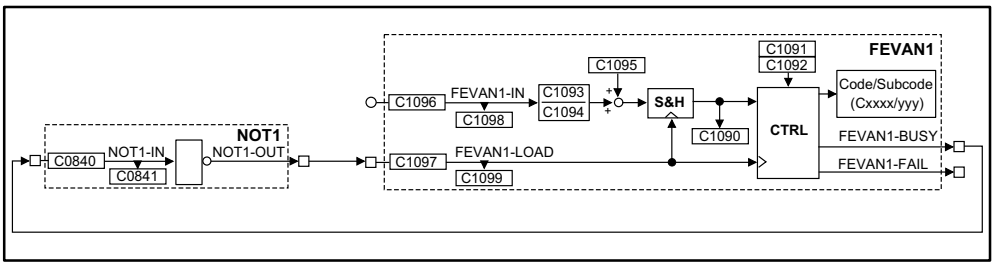

Fig. 7-105 Example for a cycle data transmission to a target code

Conversion

In the example, the conversion is performed at FB FEVAN1.

- The data format of the target code is important for the conversion (see attribute table, chapter 7.11).
- Adapt input signal to the data format of the target code:
  – C1093 (numerator)
  – C1094 (denominator).
- C1094 also fixes the decimal code of the target code:
  – Set C1094 corresponding to the existing decimal codes of the target code. The number of decimal codes can be obtained from the code table.
  – 0.0001 ≙ no decimal codes
  – 0.001 ≙ one decimal code
  – 0.01 ≙ decimal codes
  – 0.1 ≙ three decimal codes
  – 1 ≙ four decimal codes
- For target codes with percentage standardization, the formula for the conversion must include a scaling factor (see example 1).

Example 1 (only for FIX32 format with percentage scaling):

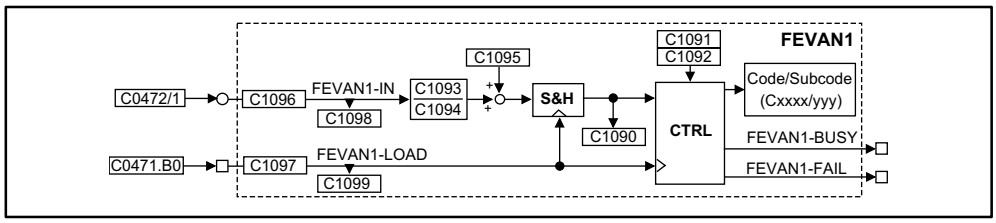

Fig. 7-106 Example of a circuit for FIX32 format with percentage scaling

Task:

- C0472/1 = 1.05 %. Write this value to C0141.

Configuration:

- Connect FEVAN1-IN (C1096) to FCODE-472/1 (19521).
- Connect FEVAN1-LOAD (C1097/1) to FCODE-471.B0 (19521).

Parameterization:

- Set C1091 = 141 (≙ C0141)
- Set C1092=0 (no subcode)
- C1093 = calculate numerator
- Set C1094 = 0.01 (two decimal places)
- Set C1095 = 0 (no offset)

Calculation:

$$\text{FEVAN1–IN [\%]} \cdot \underbrace{\frac{1}{10000}}_{\text{Scaling factor}} \cdot \underbrace{\frac{16384}{100}}_{\text{Scaling factor}} \cdot \frac{C1093}{C1094} + C1095 = C0141\ [\%]$$

Control:

- Set C0471.B0 = 1 (≙ 00000001h) so that the data are transmitted to the target code.

Example with target C1093:

$$\underbrace{1{,}05\ \%}_{\text{Setpoint in C0141}} \cdot 10000 \cdot \frac{100}{16384} \cdot C1094 \cdot \underbrace{\frac{1}{1{,}05\ \%}}_{\text{FEVAN1-IN}} = C1093 = 0.6103$$

Display:

- C0141 = 1.00 %

Example 2 (only for FIX32 format scaling):

Task:

- C0473/1 = 1000. Write this value to C0011.

Configuration:

- Connect FEVAN1-IN (C1096) to FCODE-473/1 (19551).
- Connect FEVAN1-LOAD (C1097/1) to FCODE-471.B0 (19521).

Parameterization:

- Set C1091 = 11 (≙ C0011)
- Set C1092=0 (no subcode)
- Set C1093 = 1.0
- Set C1094 = 0.0001 (no decimal place)
- Set C1095 = 0 (no offset)

The source code has no unit. The standardization factor is omitted.

Calculation:

$$\text{FEVAN1–IN} \cdot \frac{1}{10000} \cdot \underbrace{\frac{\text{C1093}}{\text{C1094}}}_{\text{Scaling factor}} + \text{C1095} = \text{C0011 [rpm]}$$

$$1000 \cdot \frac{1}{10000} \cdot \frac{1,0}{0.0001} + 0 = 1000 \text{ rpm}$$

Control:

- Set C0471.B0 = 1 (≙ 00000001h) so that the data are transmitted to the target code.

Display:

- C0011 displays the value 1000 rpm.

The other formats are calculated according to the following formula:

$$\text{FEVAN1–IN} \cdot \frac{\text{C1093}}{\text{C1094}} + \text{C1095} = x$$

7.6.34 Flipflop (FLIP)

Purpose

This FB is a D flipflop. This function is used to evaluate and save digital signal transitions.

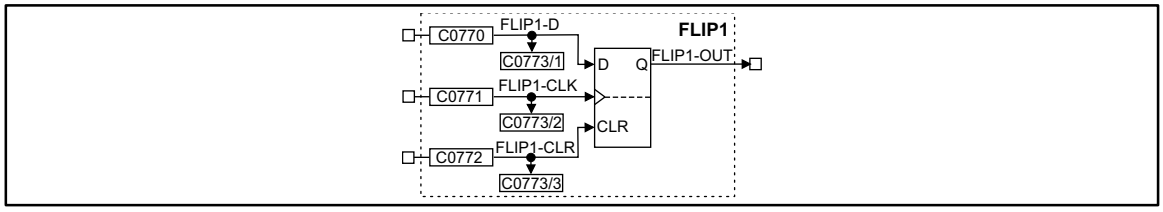

Fig. 7-107 Flipflop (FLIP1)

Signal				Source			Note
Name	Type	DIS	DIS format	CFG	List	Lenze	
FLIP1-D	d	C0773/1	bin	C0770	2	1000	-
FLIP1-CLK	d	C0773/2	bin	C0771	2	1000	evaluates LOW-HIGH edges only
FLIP1-CLR	d	C0773/3	bin	C0772	2	1000	evaluates the input level only: input has highest priority
FLIP1-OUT	d	-	-	-	-	-	-

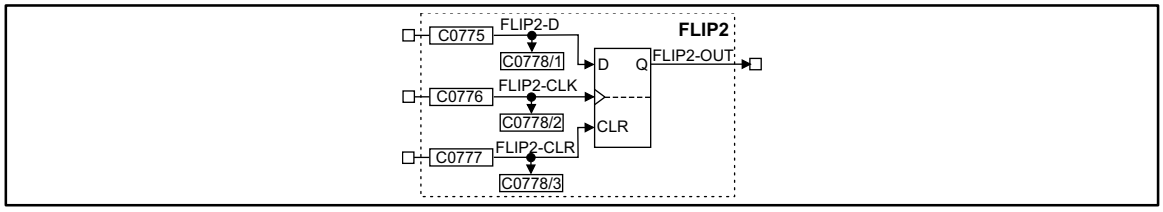

Fig. 7-108 Flipflop (FLIP2)

Signal				Source			Note
Name	Type	DIS	DIS format	CFG	List	Lenze	
FLIP2-D	d	C0778/1	bin	C0775	2	1000	-
FLIP2-CLK	d	C0778/2	bin	C0776	2	1000	evaluates LOW-HIGH edges only
FLIP2-CLR	d	C0778/3	bin	C0777	2	1000	evaluates the input level only: input has highest priority
FLIP2-OUT	d	-	-	-	-	-	-

Function

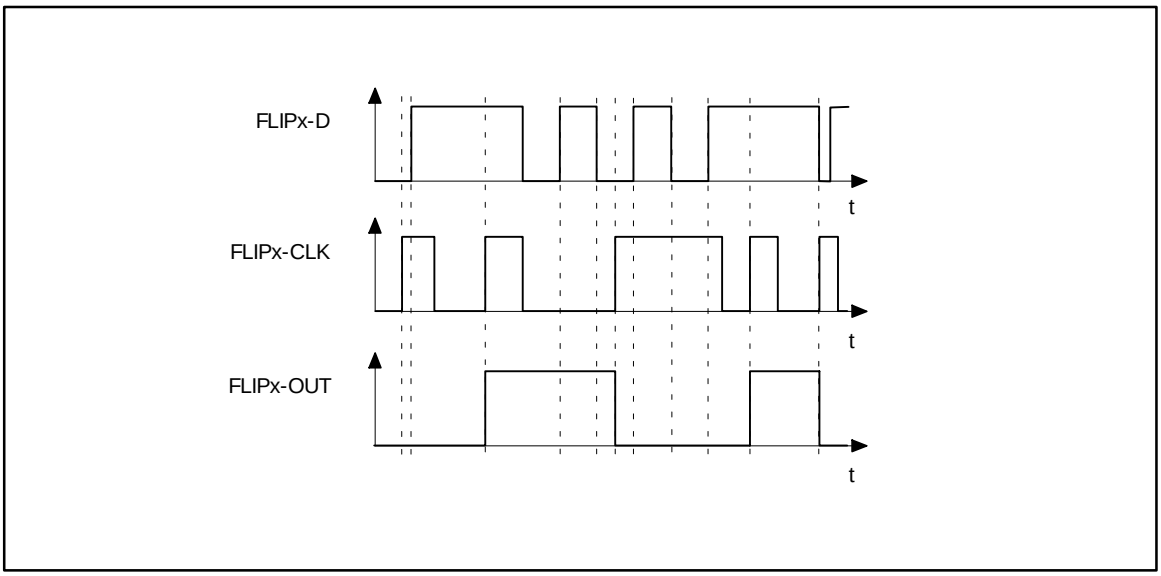

Fig. 7-109 Sequence of a flipflop

- The input FLIPx-CLR always has priority.
- If a HIGH level is applied at the input FLIPx-CLR, the output FLIPx-OUT is set to a LOW level and maintained until this input is applied to a HIGH level.
- With a LOW-HIGH edge at the input FLIPx-CLK, the level at the input FLIPx-D is switched to the output and saved until
  – another LOW-HIGH edge is applied at the input FLIPx-CLK or
  – the input FLIPx-CLR is applied to a HIGH level.

7.6.35 Limiter (LIM)

Purpose

This FB is used to limit signals to ranges which can be set.

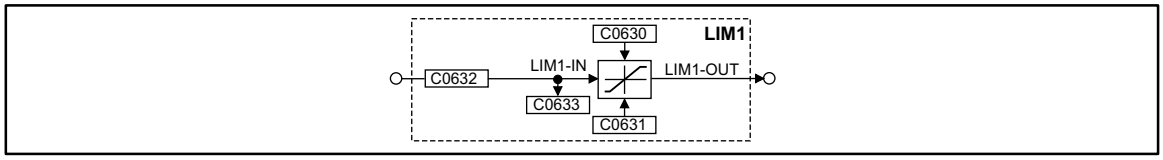

Fig. 7-110 Limiter (LIM1)

Signal				Source			Note
Name	Type	DIS	DIS format	CFG	List	Lenze	
LIM1-IN1	a	C0633	dec [%]	C0632	1	1000	-
LIM1-OUT	a	-	-	-	-	-	-

Function

- If the input signal exceeds the upper limit (C0630), the upper limit is effective.
- If the input signal falls below the lower limit (C0631), the lower limit is effective.

Tip!

The lower limit (C0631) must be smaller than the upper limit (C0630).

7.6.36 Internal motor control (MCTRL)

Purpose

This function block consists of the control of the driving machine including: phase controller, speed controller, and motor control.

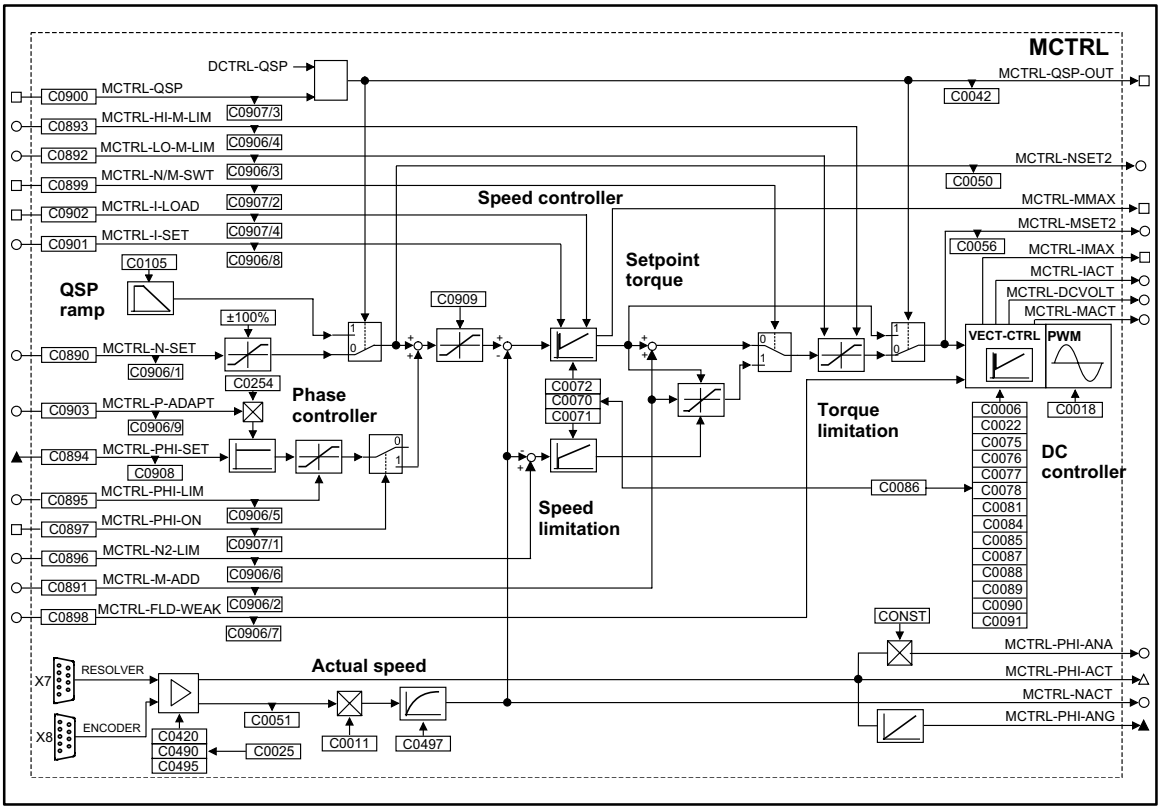

Fig. 7-111 Function block MCTRL

Signal				Source			Note
Name	Type	DIS	DIS format	CFG	List	Lenze	
MCTRL-PHI-SET	ph	C0908	dec [inc]	C0894	3	1000	Input phase controller for difference between set and actual phase
MCTRL-N-SET	a	C0906/1	dec [%]	C0890	1	5050	Input speed setpoint
MCTRL-M-ADD	a	C0906/2	dec [%]	C0891	1	1000	Additional torque setpoint or torque setpoint
MCTRL-LO-MLIM	a	C0906/3	dec [%]	C0892	1	5700	Lower torque limit in % of C0057
MCTRL-HI-MLIM	a	C0906/4	dec [%]	C0893	1	19523	Upper torque limit in % of C0057
MCTRL-PHI-LIM	a	C0906/5	dec [%]	C0895	1	1006	Influence of the phase controller in % of nmax C0011
MCTRL-N2-LIM	a	C0906/6	dec [%]	C0896	1	1000	Lower speed limit for speed limit
MCTRL-FLDWEAK	a	C0906/7	dec [%]	C0898	1	1006	Motor excitation
MCTRL-I-SET	a	C0906/8	dec [%]	C0901	1	1006	Input to set the I-component of the speed controller
MCTRL-PHI-ON	d	C0907/1	bin	C0897	2	1000	HIGH = Activate phase controller
MCTRL-N/M-SWT	d	C0907/2	bin	C0899	2	1000	LOW = speed control active HIGH = torque control active
MCTRL-QSP	d	C0907/3	bin	C0900	2	10250	HIGH = Drive performs QSP
MCTRL-I-LOAD	d	C0907/4	bin	C0902	2	1000	HIGH = I component of the n-controller is accepted by MCTRL-I-SET
MCTRL-PHI-ACT	phd	-	dec [rpm]	-	-	-	
MCTRL-PHI-ANG	ph	-	dec [inc]	-	-	-	65536 inc = one revolution
MCTRL-NACT	a	-	dec [%]	-	-	-	in % of nmax (C0011)
MCTRL-PHI-ANA	a	-	dec [%]	-	-	-	Actual phase as analog signal 90 degree = 100%
MCTRL-MACT	a	-	dec [%]	-	-	-	in % of Mmax (C0057)
MCTRL-MSET2	a	-	dec [%]	-	-	-	in % of Mmax (C0057)
MCTRL-NSET2	a	-	dec [%]	-	-	-	in % of nmax (C0011)
MCTRL-DCVOLT	a	-	dec [%]	-	-	-	100% = 1000V
MCTRL-QSP-OUT	d	-	bin	-	-	-	HIGH = Drive performs QSP
MCTRL-MMAX	d	-	bin	-	-	-	HIGH = Speed controller operates within its limit
MCTRL-IMAX	d	-	bin	-	-	-	HIGH = Drive operates at its current limit C0022

Function

- Current controller
- Torque limitation
- Additional torque setpoint
- Speed controller
- Torque control with speed limit
- Limiting of speed setpoint
- Phase controller
- Quick stop QSP
- Field weakening
- Chopping frequency change-over

7.6.36.1 Current controller

Adapt current controller under C0075 (proportional gain) and C0076 (adjustment time) to the connected machine.

Tip!

Set a suitable motor from the motor selection list under C0086. (📖7-225)
This sets the parameters of the current controller automatically correct.

7.6.36.2 Additional torque setpoint

Depending on the triggering of the input MCTRL-IN/M-SWT, the input MCTRL-M-ADD serves as a torque setpoint or an additional torque setpoint. The additional torque setpoint can be used, for example for friction compensation or for speed injection (dv/dt).

- With MCTRL-N/M-SWT = LOW the speed control is active.
  - MCTRL-M-ADD is added to the output of the n-controller.
  - the limits set by the torque limit MCTRL-LO-M-LIM and MCTRL-HI-M-LIM cannot be exceeded.
- With MCTRL-N/M-SWT = HIGH the torque control is active.
  - MCTRL-M-ADD acts as a torque setpoint.
  - The n-controllers have a monitoring function.
- The torque setpoint is provided in % of the maximum torque (see code C0057).
  - negative values mean a torque with CCW rotation of the motor.
  - positive values mean a torque with CW rotation of the motor.

7.6.36.3 Torque limiting

An external torque limit can be set by the inputs MCTRL-LO-M-LIM and MCTRL-HI-M-LIM. This means that different torques can be set for the quadrants ”driving” and ”braking”.

- MCTRL-HI-M-LIM is the upper torque limit in % of the max. possible torque (C0057).
- MCTRL-LO-M-LIM is the lower torque limit in % of the max. possible torque (C0057).
- In case of quick stop (QSP) the torque limitation is deactivated.

Stop!

Only set positive values in MCTRL-HI-M-LIM and negative values in MCTRL-LO-M-LIM, otherwise the speed controller may lose control.The drive may accelerate accidently.

7.6.36.4 Speed controller

The speed controller is designed as an ideal PID - controller.

Parameter setting

When a motor from the selection list motors is selected under C0086, the parameters are set so that only very few adjustments to the application are necessary, if any. (📖7-225)

- For parameter setting of the proportional gain Vp under C0070
  – enter approx. 50% speed setpoint.
  – Increase C0070, until the drive becomes instable (observe motor noises).
  – Reduce C0070, until the drive becomes stable again.
  – Reduce C0070 to approx. 50%.
- For parameter setting of the adjustment time Tn under C0071.
  – Reduce C0071, until the drive becomes instable (observe motor noises).
  – Increase C0071, until the drive becomes stable again.
  – Set C0071 to approx. twice the value.
- For parameter setting of the difference gain Td under C0072.
  – Increase C0072 during operation until an optimum control behaviour is achieved.

Signal limit

When the drive outputs the maximum torque, the speed controller is at its limit.

- The drive cannot follow the speed setpoint.
- This state is shown with MCTRL-MMAX = HIGH.

Set integral component

To enter defined starting values in the torque, the integral component of the n-controller can be set externally (e.g. when using the brake control).

- MCTRL-I-LOAD = HIGH
  – The n-controller accepts the value at the input MCTRL-I-SET as its integral component.
  – The value at the input MCTRL-I-SET acts as a torque setpoint for the motor control.
- MCTRL-I-LOAD = LOW
  – Function switched off.

7.6.36.5 Torque control with speed limit

This function is activated by MCTRL-N/M-SWT = HIGH. For the speed limit, a second speed controller (auxiliary speed controller) is connected.

- MCTRL-M-ADD acts as a bipolar torque setpoint.
- n-controller 1 generates the upper speed limit.
  – The upper speed limit is provided in % at the input MCTRL-N-SET by nmax C0011 (positive sign for CW rotation).
  – The upper speed limit should only be used for CW rotation.
- n-controller 2 (auxiliary controller) generates the lower speed limit.
  – The lower speed limit is provided in % at the input MCTRL-N2-LIM by nmax C0011 (negative sign for CCW rotation).
  – The lower speed limit should only be used for CCW rotation.

7.6.36.6 Limiting of speed setpoint

The speed setpoint in the input MCTRL-N-SET is limited to 100% of nmax C0011.

A limit of the direction of rotation for the speed setpoint can be set under C0909.

7.6.36.7 Phase controller

The phase controller is required to achieve a phase synchronization and driftfree standstill.

Tip!

Select a configuration with digital frequency coupling under C0005. This allows an automatic connection of all important signals. On this basis, you can optimize the system.

To activate the phase controller:

1. Configure a signal source under C0894, which provides the phase difference between set and actual phase (see "digital frequency - configurations under C0005").
2. Enter a value > 0 at the input MCTRL-PHI-LIM.
3. Trigger the input MCTRL-PHI-ON with HIGH (e.g. FIXED1).
4. Set the gain of the phase controller C0254 > 0 (see chapter 7.6.36.4)
   – Before setting C0254, select a P-gain C0070 for the n-controller as high as possible.
   – During operation increase C0254, until the drive shows the desired control behaviour.

Phase controller influence

The output of the phase controller is added to the speed setpoint.

- If the actual phase is lagging, the drive is accelerated
- If the acutal phase is leading, the drive is decelerated

until the desired phase synchronization is achieved.

The influence of the phase controller consists of:

- Phase difference multiplied by the P-gain C0254
- Limiting of the phase controller output to MCTRL-PHI-LIM

Limiting of the phase controller output

This limits the maximum speed-up of the drive in the event of large phase differences.

7.6.36.8 Quick stop (QSP)

The quick stop function (QSP) is used to stop the drive independently of the setpoint input within a time to be set.

The quick stop function is active,

- if the input MCTRL-QSP is triggered with HIGH.
- if the controller is triggered through the control words (DCTRL).

Function:

- If torque control is selected, this will be deactivated. The drive is controlled by the speed controller.
- The speed decelerates with the deceleration rate set under C0105 to zero speed.
- The torque limits MCTRL-LO-M-LIM and MCTRL-HI-M-LIM are deactivated.
- The phase controller is activated. If the rotor position is shifted actively, the drive generates a torque against this displacement, if:
  – C0254 is not zero
  – the input MCTRL-PHI-LIM is triggered with a value > 0 %.

Stop!

If the field is weakened manually (MCTRL-FLD-WEAK < 100%), the drive cannot supply the maximum torque.

7.6.36.9 Field weakening

The field weakening does not have to be set if the motor type was set under under C0086. All necessary settings are done automatically. The driving machine is operated in the field weakening, if:

- the output voltage of the controller exceeds the rated motor voltage set under C0090.
- the controller can no longer increase the output voltage with increasing speed due to the mains voltage or DC bus voltage.

Manual field weakening

A manual field weakening is possible via the input MCTRL-FLD-WEAK. For a maximum excitation, this input must be triggered with +100% (e.g.FIXED100%).

Stop!

The available torque is reduced by the field weakening.

7.6.36.10 Chopping frequency change-over

The chopping frequency of the inverter can be selected:

- 8 kHz fixed, for operation with optimum power, C0018 = 1
  – maximum power output of the controller, but with audible pulse operation
- 16 kHz fixed, for operation with optimum noise, C0018 = 2
  – inaudible pulse operation of the controller, but with reduced power (torque)
- automatic change-over between operation with optimum power and optimum noise, C0018 = 0

Automatic chopping frequency change-over

The automatic chopping frequency change-over can be used if the drive is to be operated with optimum noise, but the torque available in this mode is not sufficient for accelerations.

Condition M = f(I)	Function
$M < M_{r16}$ (I_{r16})	Controller operates with 16 KHz (optimum noise)
M_{r16} (I_{r16}) $< M < M_{r8}$ (I_{r8})	Controller changes to 8 KHz (optimum power)
$M > M_{max8}$ (I_{max8})	Controller operates with 8 KHz in its current limitation

7.6.37 Motor potentiometer (MPOT)

Purpose

The FB replaces a hardware motor potentiometer.

The motor potentiometer is used as an alternative setpoint source which is triggered by two terminals.

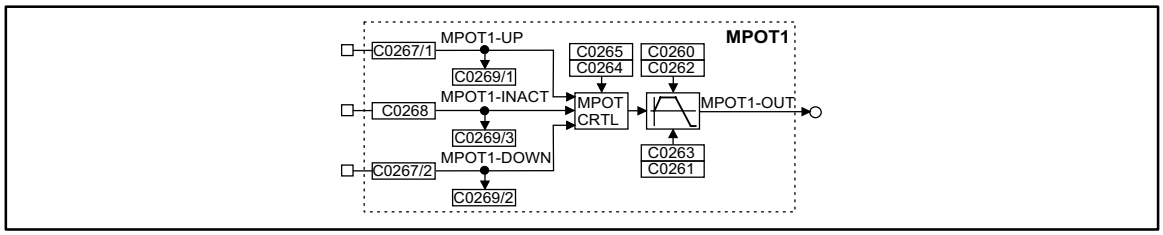

Fig. 7-112 Motor potentiometer (MPOT1)

Signal				Source			Note
Name	Type	DIS	DIS format	CFG	List	Lenze	
MPOT1-UP	d	C0269/1	bin	C0267/1	2	1000	-
MPOT1-INACT	d	C0269/3	bin	C0268	2	1000	-
MPOT1-DOWN	d	C0269/2	bin	C0267/2	2	1000	-
MPOT1-OUT	a	-	-	-	-		-

Function

Control of the motor potentiometer:

- MPOT1-UP = HIGH
  – The motor potentiometer approaches its upper limit.
- MPOT1-DOWN = HIGH
  – The motor potentiometer approaches its lower limit.
- MPOT1-UP = LOW and MPOT1-DOWN = LOW or
  MPOT1-UP = HIGH and MPOT1-DOWN = HIGH:
  – The motor potentiometer does not change its output signal.

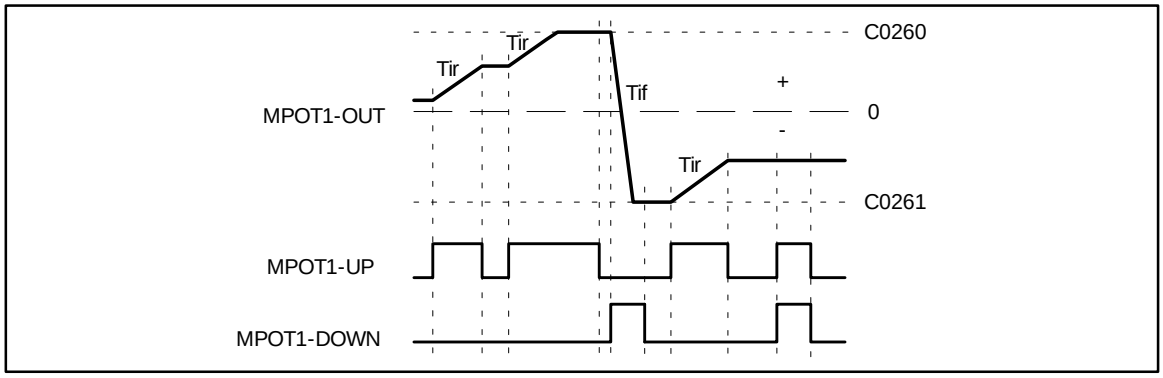

Fig. 7-113 Control signals of the motor potentiometer

Another digital input (MPOT1-INACT) exists apart from the two digital inputs MPOT1-UP and MPOT1-DOWN. The motor potentiometer function can be activated or deactivated with the input MPOT1-INACT. Logic 1 at this input activates the motor potentiometer function. The input MPOT1-INACT has priority over the inputs MPOT1-UP and MPOT1-DOWN.

When the motor potentiometer is deactivated, the motor potentiometer output (MPOT1-OUT) follows the function set under C0264. Under C0264, you can set the following functions:

C0264 =	Meaning
0	No further action; the output MPOT1-OUT keeps its value
1	The motor potentiometer returns to 0 % with the corresponding deceleration time
2	The motor potentiometer approaches its lower limit (C0261) with the corresponding deceleration time
3	The motor potentiometer immediately changes its output to 0%. **(important for emergency stop function)**
4	The motor potentiometer immediately changes its output to the lower limit (C02619
5	The motor potentiometer approaches its upper limit (C0260) with the corresponding acceleration time

If the motor potentiometer is activated (input MPOT1-INACT = 0), the subsequent function depends on

- the momentary output signal,
- the set limits of the MPOT
- the control signals UP and DOWN.

If the output value is out of the limits, the MPOT approaches the next limt with the set T_i times. This function is independent of the control inputs MPOT1-UP and MPOT1-DOWN

If the output value is within the limits, the output follows the selected control function UP, DOWN or no action.

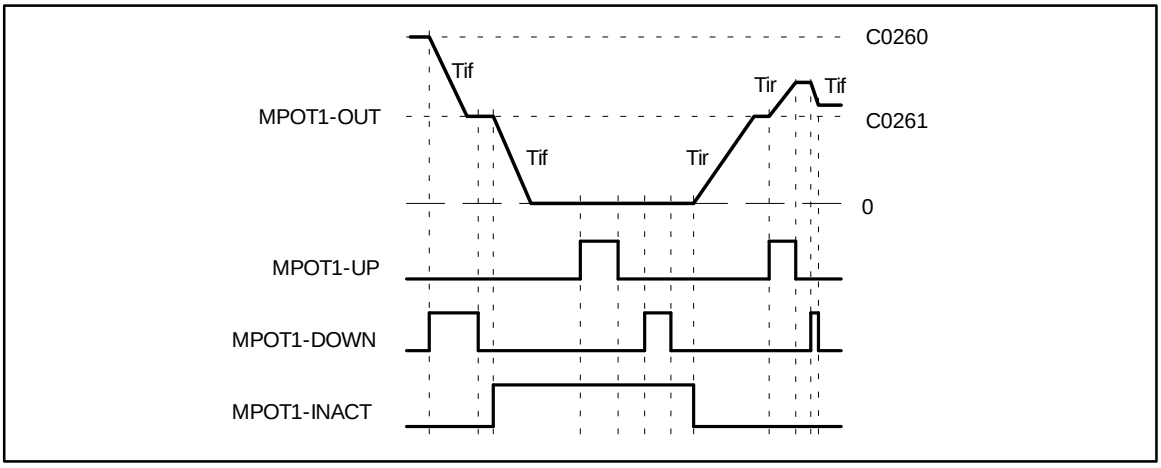

Fig. 7-114 Deactivation of the motor pot via the input MPOT1-INACT

Initialization

With this function, the output value MPOT can be saved non-volatile in the internal memory of the device. The values is saved automatically if this function was selected under the code. The values is then restored to the MPOT after mains connection.

You can activate other initialization functions under C0265 (see code table).

If the initialization is completed, the MPOT follows the applied control function.

7.6.38 Logic NOT (NOT)

Purpose

Logic inversion of digital signals. The inversion can be used for the control of functions or the generation of status information.

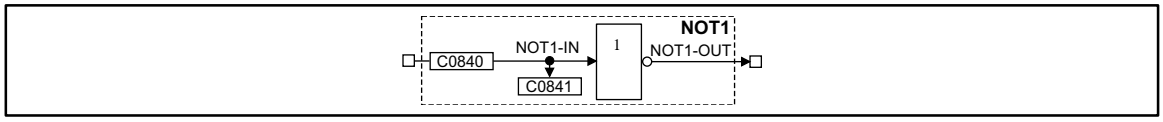

Fig. 7-115 Logic NOT

Signal				Source			Note
Name	Type	DIS	DIS format	CFG	List	Lenze	
NOT1-IN	d	C0841	bin	C0840	2	1000	-
NOT1-OUT	d	-	-	-	-	-	-

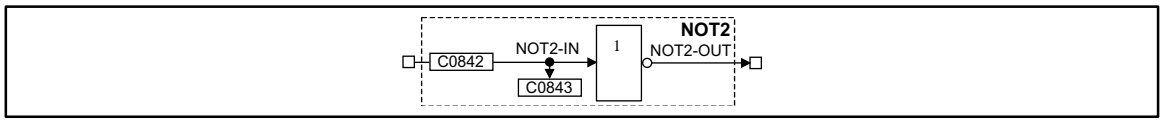

Fig. 7-116 Logic NOT (NOT2)

Signal				Source			Note
Name	Type	DIS	DIS format	CFG	List	Lenze	
NOT2-IN	d	C0843	bin	C0842	2	1000	-
NOT2-OUT	d	-	-	-	-	-	-

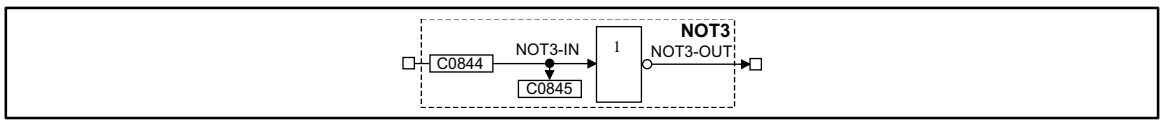

Fig. 7-117 Logic NOT (NOT3)

Signal				Source			Note
Name	Type	DIS	DIS format	CFG	List	Lenze	
NOT3-IN	d	C0845	bin	C0844	2	1000	-
NOT3-OUT	d	-	-	-	-	-	-

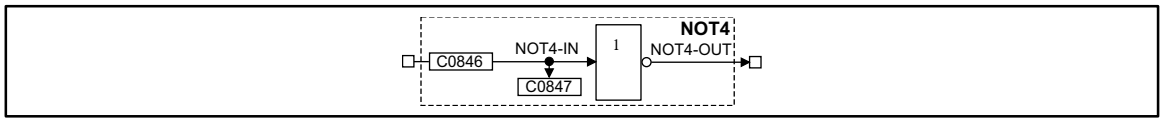

Fig. 7-118 Logic NOT (NOT4)

Signal				Source			Note
Name	Type	DIS	DIS format	CFG	List	Lenze	
NOT4-IN	d	C0847	bin	C0846	2	1000	-
NOT4-OUT	d	-	-	-	-	-	-

Function block library

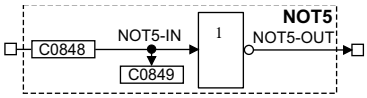

Fig. 7-119 Logic NOT (NOT5)

Signal				Source			Note
Name	Type	DIS	DIS format	CFG	List	Lenze	
NOT5-IN	d	C0849	bin	C0848	2	1000	-
NOT5-OUT	d	-	-	-	-	-	-

Function

NOTx-IN1	NOTx-OUT
0	1
1	0

The function corresponds to a change from a normally-open contact to a normally-closed contact in a control with contactors.

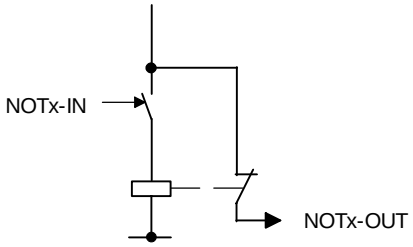

Fig. 7-120 Function of NOT as a change from a normally-open to a normally-closed contact

7.6.39 Conditioning of the setpoint speed (NSET)

Purpose

This FB conditions the

- main setpoint speed and
- and additional setpoint (or other signals)

for the subsequent control structure via ramp generator or fixed speeds.

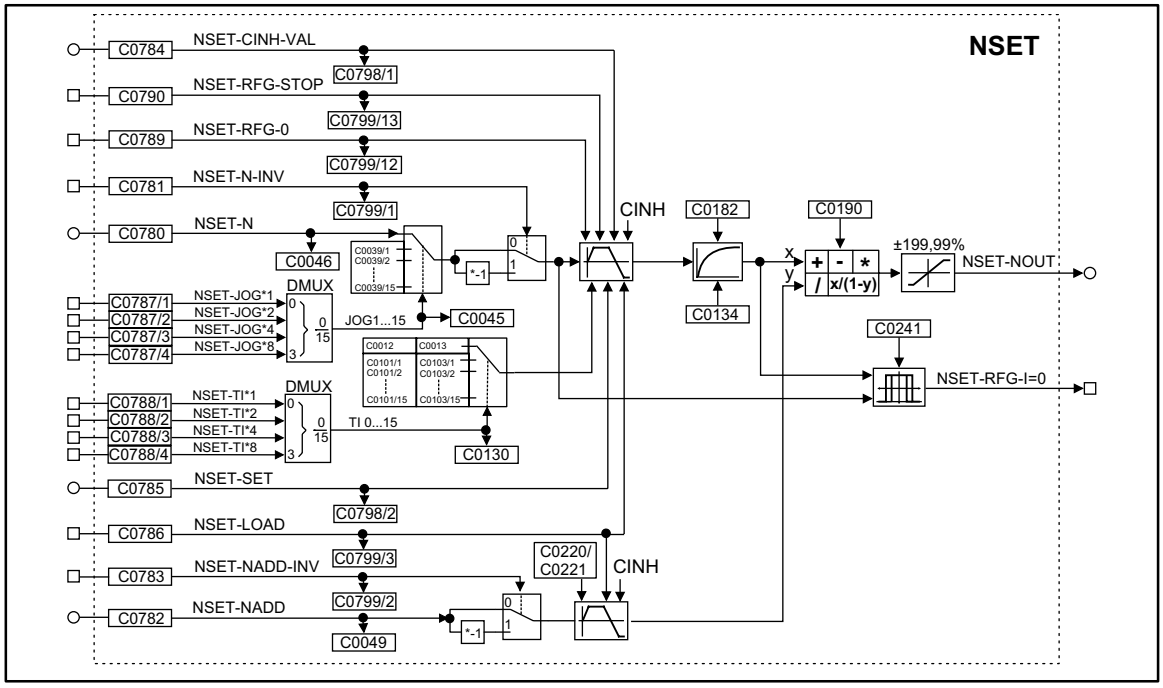

Fig. 7-121 Conditioning of the setpoint speed (NSET)

Signal				Source			Note
Name	Type	DIS	DIS format	CFG	List	Lenze	
NSET-N	a	C0046	dec [%]	C0780	1	50	Provided for main setpoint; other signals are permissible
NSET-NADD	a	C0047	dec [%]	C0782	1	5650	Provided for additional setpoint; other signals are permissible
NSET-JOG*1	d	C0799/4	bin	C0787/1	2	53	Selection and control of overriding ”fixed setpoints” for the main setpoint
NSET-JOG*2	d	C0799/5	bin	C0787/2	2	1000	
NSET-JOG*4	d	C0799/6	bin	C0787/3	2	1000	
NSET-JOG*8	d	C0799/7	bin	C0787/4	2	1000	
NSET-TI*1	d	C0799/8	bin	C0788/1	2	1000	Selection and control of alternative ”fixed setpoints” for the main setpoint
NSET-TI*2	d	C0799/9	bin	C0788/2	2	1000	
NSET-TI*4	d	C0799/10	bin	C0788/3	2	1000	
NSET-TI*8	d	C0799/11	bin	C0788/4	2	1000	
NSET-N-INV	d	C0799/1	bin	C0781	2	10251	Control of the signal inversion for the main setpoint
NSET-NADD-INV	d	C0799/2	bin	C0783	2	1000	Control of the signal inversion for the additional setpoint
NSET-RFG-0	d	C0799/12	bin	C0789	2	1000	The main setpoint integrator is led to zero via the momentary T_i times
NSET-RFG-STOP	d	C0799/13	bin	C0790	2	1000	Holding (freezing) of the main setpoint integrator to its momentary value
NSET-CINH-VAL	a	C0798/1	dec [%]	C0784	1	5001	The signal is generated which the main setpoint integrator is to be accepted when the controller is inhibited
NSET-SET	a	C0798/2	dec [%]	C0785	1	5000	The signal is generated which the main setpoint integrator is to be accepted when the NSET-LOAD input is set
NSET-LOAD	d	C0799/3	bin	C0786	2	5001	Control of the two ramp generators in special situations e.g. QSP
NSET-OUT	a	-	-	-	-	-	-
NSET-RFG-I=0	d	-	-	-	-	-	-

Function

- Main setpoint channel
- JOG setpoints
- Setpoint inversion
- S ramp

7.6.39.1 Main setpoint channel

- The signals in the main setpoint channel are limited to the range of ±199.99 %.
- The signal at input NSET-N is led via the function JOG selection.
- The JOG function has priority over the setpoint input NSET-N. This means a selected JOG value switches the input to inactive. The following signal conditioning uses the JOG value instead.

7.6.39.2 JOG setpoints

- These are fixed values which are saved in the memory.
- JOG values can be called from the memory via the inputs NSET-JOG*x.
- The inputs NSET-JOG*x are binary coded so that 15 JOG values can be called.
- The decoding for the enabling of the JOG values (calling from the memory) is carried out according to the following table:

Output signal	1st input NSET-JOG*1	Input NSET-JOG*2	3rd input NSET-JOG*4	4th input NSET-JOG*8
NSET-N	0	0	0	0
JOG 1	1	0	0	0
JOG 2	0	1	0	0
JOG 3	1	1	0	0
JOG 4	0	0	1	0
JOG 5	1	0	1	0
JOG 6	0	1	1	0
JOG 7	1	1	1	0
JOG 8	0	0	0	1
JOG 9	1	0	0	1
JOG 10	0	1	0	1
JOG 11	1	1	0	1
JOG 12	0	0	1	1
JOG 13	1	0	1	1
JOG 14	0	1	1	1
JOG 15	1	1	1	1

- If all inputs are assigned with 0, the input NSET-N is active.
- The number of inputs which you must assign, depends on the number of the required JOG setpoints. A maximum of four inputs and thus 15 possibilities can be selected. The digital signal source is assigned under C0787 and the corresponding subcode.

Number of the required JOG setpoints	Number of the inputs to be assigned
1	at least 1
1 ... 3	at least 2
4 ... 7	at least 3
8 ... 15	4

7.6.39.3 Setpoint inversion

The output signal of the JOG function is led via an inverter.

The sign of the setpoint is inverted if the input NSET-N-INV is triggered with a HIGH signal.

Ramp generator for the main setpoint

The setpoint is then led via a ramp generator with linear characterisitc. Setpoint step-changes are thus transformed into a ramp.

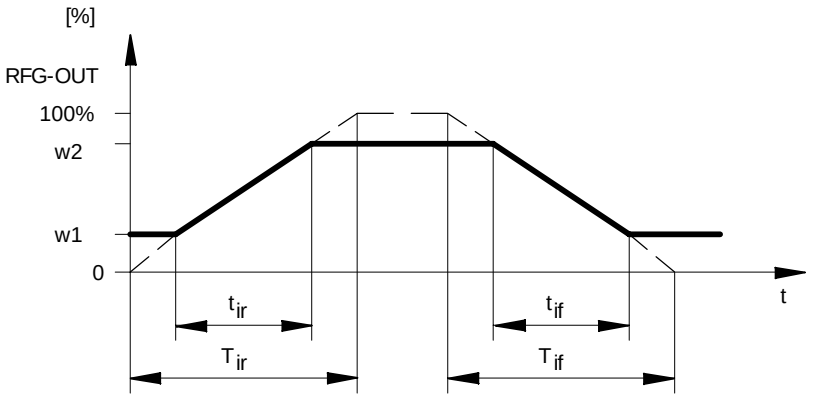

$$T_{ir} = t_{ir}\frac{100\%}{w2 - w1} \qquad T_{if} = t_{if}\frac{100\%}{w2 - w1}$$

Fig. 7-122 Acceleration and deceleration times of the ramp generator

- The ramps can be adjusted separately for acceleration and deceleration.
  - 16 acceleration and deceleration times can be switched active via the inputs NSET-TI*x (for table and function see JOG setpoints; they are decoded according to the signal graphic).
  - The T_i times can only be activated in pairs.
- The controller inhibit (CINH) is set, the ramp generator accepts the value which was applied at the input NSET-CINH-VAL and transmits it to the next function. This function has priority over all other functions.
- NSET-RFG-STOP = HIGH
  - The ramp generator is stopped. Changes at the input of the ramp generator have no effect on the output.
- NSET-RFG-0 = HIGH
  - The ramp generator decelerates to zero along its deceleration ramp.
- It is also possible to load the ramp generator online with a defined value. For this, the input NSET-LOAD must be set to HIGH. As long as this input is set, the value at the input NSET-SET is accepted by the ramp generator and provided at the output.

Priorities:

CINH	NSET-LOAD	NSET-RFG-0	NSET-RFG-STOP	Function
0	0	0	0	RFG follows the input value via the set ramps
0	0	0	1	The value at the ouput of RFG is frozen
0	0	1	0	RFG decelerates to zero along the set deceleration ramp
0	0	1	1	
0	1	0	0	RFG accepts the value applied at the input NSET-SET and provides it to its output
0	1	0	1	
0	1	1	0	
0	1	1	1	
1	0	0	0	RFG accepts the value applied at the input NSET-CINH-VAL and provides it to its output
1	0	0	1	
1	0	1	0	
1	0	1	1	
1	1	0	0	
1	1	0	1	
1	1	1	0	
1	1	1	1	

7.6.39.4 S ramp

A PT1 element is connected to the linear ramp generator. This arrangement implements an S ramp for an almost jerk-free acceleration and deceleration.

- The PT1 element is connected and disconnected by C0134.
- The time constant is set under C0182.

7.6.39.5 Arithmetic operation

The output value is led to an arithmetic module. This module links the main setpoint and the additional setpoint arithmetically. The arithmetic operation is selected under C0190 (see table below).

C0190	Function	Example
0	Output = X (Y is not processed)	-
1	Output = X + Y	100 % = 50 % + 50 %
2	Output = X - Y	50 % = 100 % - 50%
3	Output = X * Y	100 % = 100 % * 100%
4	Output = X/|Y|	1 % = 100 % / 100%
5	Output = X/(100% - Y)	200 % = 100 % / (100 % - 50 %)

7.6.39.6 Additional setpoint

- An additional setpoint (e.g. a correction signal) can be linked to the main setpoint via the input NSET-NADD.
- The input signal can be inverted via the input NSET-NADD-INV, before it has an effect on the ramp generator. The ramp generator has a linear characteristic with one acceleration and one deceleration time.
- When NSET-LOAD = HIGH the ramp generator is set to zero and held there without considering the T_i times. The same applies when controller inhibit is set.

7.6.40 OR operation (OR)

Purpose

Logic OR operation of digital signals. The operations can be used for the control of functions or the generation of status information.

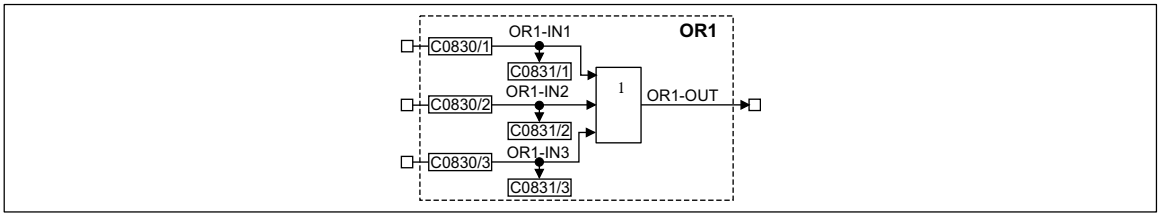

Fig. 7-123 OR operation

Signal				Source			Note
Name	Type	DIS	DIS format	CFG	List	Lenze	
OR1-IN1	d	C0831/1	bin	C0830/1	2	1000	-
OR1-IN2	d	C0831/2	bin	C0830/2	2	1000	-
OR1-IN3	d	C0831/3	bin	C0830/3	2	1000	-
OR1-OUT	d	-	-	-	-	-	-

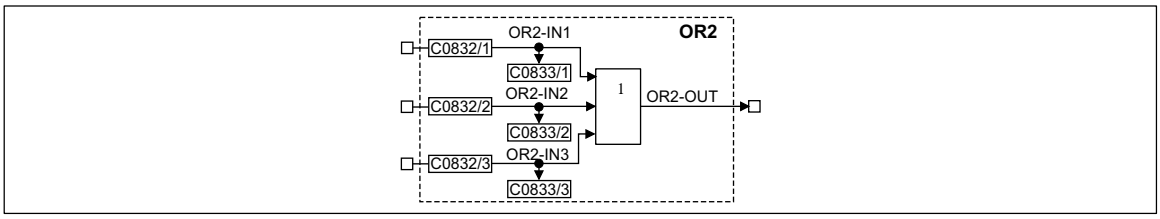

Fig. 7-124 OR operation (OR2)

Signal				Source			Note
Name	Type	DIS	DIS format	CFG	List	Lenze	
OR2-IN1	d	C0833/1	bin	C0832/1	2	1000	-
OR2-IN2	d	C0833/2	bin	C0832/2	2	1000	-
OR2-IN	d	C0833/3	bin	C0832/3	2	1000	-
OR2-OUT	d	-	-	-	-	-	-

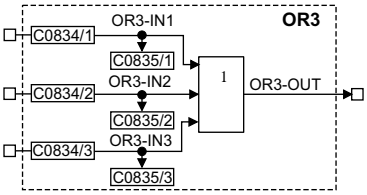

Fig. 7-125 OR operation (OR3)

Signal				Source			Note
Name	Type	DIS	DIS format	CFG	List	Lenze	
OR3-IN1	d	C0835/1	bin	C0834/1	2	1000	-
OR3-IN2	d	C0835/2	bin	C0834/2	2	1000	-
OR3-IN3	d	C0835/3	bin	C0834/3	2	1000	-
OR3-OUT	d	-	-	-	-	-	-

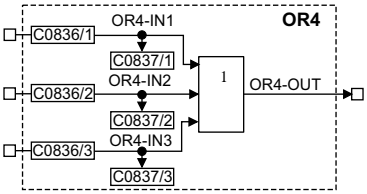

Fig. 7-126 OR operation (OR4)

Signal				Source			Note
Name	Type	DIS	DIS format	CFG	List	Lenze	
OR4-IN1	d	C0837/1	bin	C0826/1	2	1000	-
OR4-IN2	d	C0837/2	bin	C0826/2	2	1000	-
OR4-IN3	d	C0837/3	bin	C0826/3	2	1000	-
OR4-OUT	d	-	-	-	-	-	-

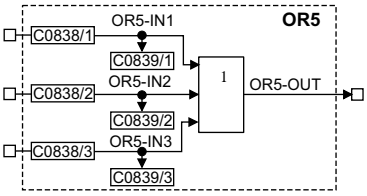

Fig. 7-127 OR operation (OR5)

Signal				Source			Note
Name	Type	DIS	DIS format	CFG	List	Lenze	
OR5-IN1	d	C0839/1	bin	C0828/1	2	1000	-
OR5-IN2	d	C0839/2	bin	C0828/2	2	1000	-
OR5-IN3	d	C0839/3	bin	C0828/3	2	1000	-
OR5-OUT	d	-	-	-	-	-	-

Function block library

Function

ORx-IN1	ORx-IN2	ORx-IN3	ORx-OUT
0	0	0	0
1	0	0	0
0	1	0	0
1	1	0	0
0	0	1	0
1	0	1	0
0	1	1	0
1	1	1	1

The function corresponds to a parallel connection of normally-open contacts in a contactor control.

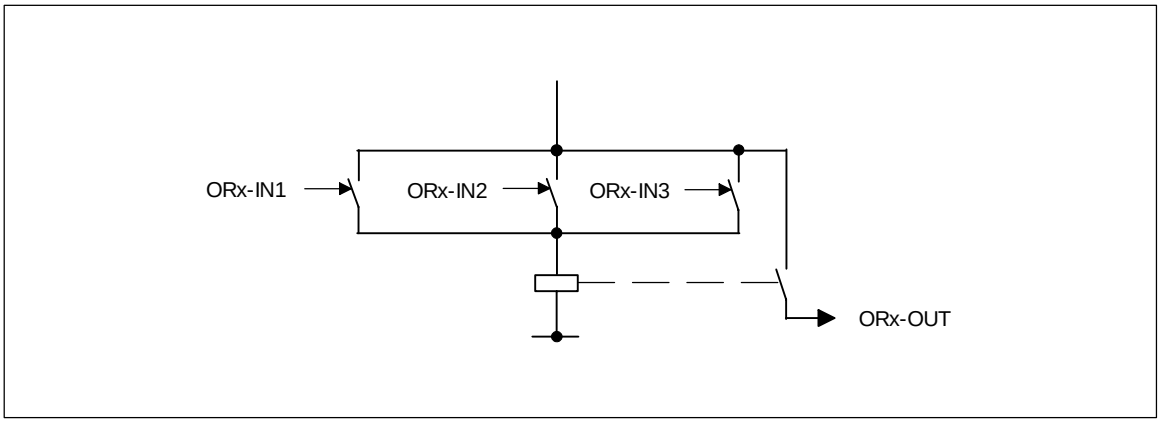

Fig. 7-128 Function of the OR operation as a parallel connection of normally-open contacts

Tip!

If only two inputs are required, use the inputs ORx-IN1 and ORx-IN2. Assign the input ORx-IN3 with the signal source FIXED0.

7.6.41 Process controller (PCTRL1)

Purpose

The FB is used, for instance, as a higher-level controller (dancer position controller, tension controller, pressure controller etc.).

The control characteristic is according to the ideal PID algorithm, but it can also be changed over to a PI or P characteristic.

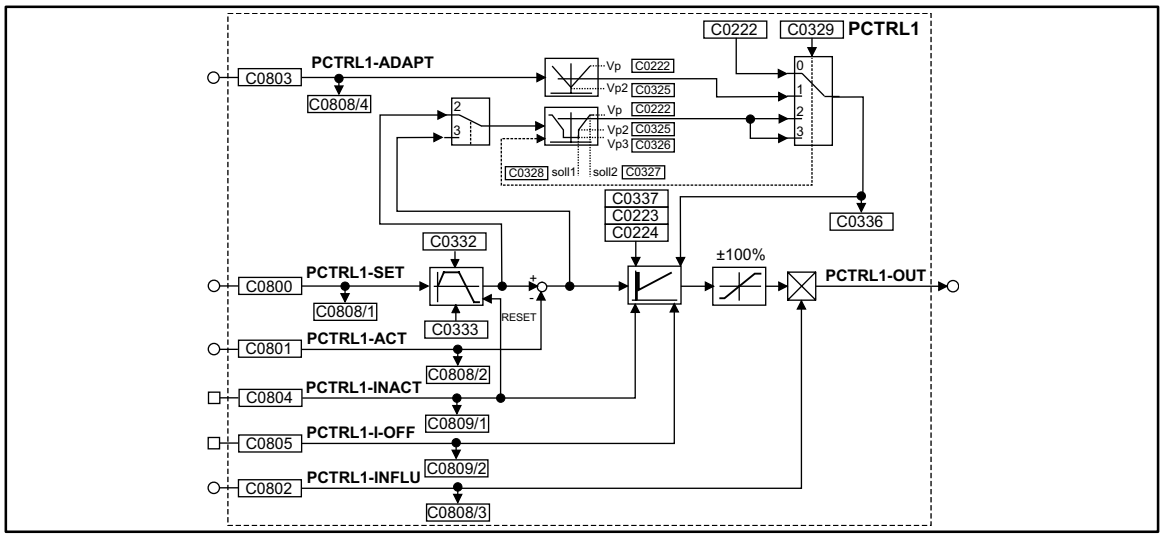

Fig. 7-129 Process controller (PCTRL1)

Signal				Source			Note
Name	Type	DIS	DIS format	CFG	List	Lenze	
PCTRL1-SET	a	C0808/1	dec [%]	C0800	1	1000	Input of the process setpoint. Possible value range: ±200%. The time of step-change signals can be decelerated via the ramp generator (C0332 for the acceleration time; C0333 for the deceleration time).
PCTRL1-ACT	a	C0808/2	dec [%]	C0801	1	1000	Actual value input; value range ±200%
PCTRL1-INFLU	a	C0808/3	dec [%]	C0802	1	1000	Evaluation or suppression of the output signal; value range ±200%
PCTRL1-ADAPT	a	C0808/4	dec [%]	C0803	1	1000	Online change of the P gain; value range ±200%
PCTRL1-INACT	d	C0809/1	bin	C0804	2	1000	Online deactivation of the process controller
PCTRL1-I-OFF	d	C0809/2	bin	C0805	2	1000	Online setting of the I component to zero
PCTRL1-OUT	a	-	-	-	-	-	-

Function

Setpoint and actual value are sent to the process controller via the corresponding inputs and processed according to the selected control algorithm (control chararacteristic).

7.6.41.1 Control characteristic

- In the default setting, the PID algorithm is active.
- The D-component can be deactivated by setting code C0224 to zero. Thus, the controller becomes a PI-controller (or P-controller if the I-component is also switched off).
- The I-component can be switched on or off online via the PCTRL-I-OFF input. For this, the input is assigned a digital signal source (e.g. one of the freely assignable digital input terminals). If the I-component is to be switched off permanently, the input is assigned the signal source "FIXED1".
  – PCTRL-I-OFF = HIGH switched off the I-component
  – PCTRL-I-OFF = LOW switches on the I-component
- The adjustment time is parameterized via C0223.
- The P-gain can be set in different ways. The function for the provision of the P-gain is selected under C0329:
  – C0329 = 0
  The P-gain is entered under C0222.
  – C0329 = 1
  The P-gain is entered via the PCTRL-ADAPT input. The input value is led via a linear characteristic. The shape of the characteristic is set under C0222 (upper limit) and C0325 (lower limit). The value under C0222 is valid if the input value = +100 % or -100 %. The value under C0325 is valid if the input value = 0 %.

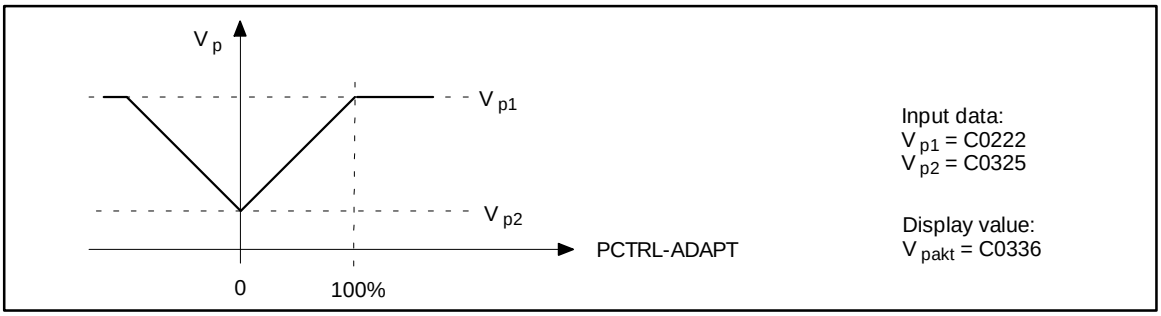

Fig. 7-130 Input of the P-gain via PCTRL-ADAPT input

  – C0329 = 2
  The P-gain is derived from the process setpoint PCTRL-SET. The setpoint is obtained after the ramp generator and calculated via the characteristic with three coordinates.

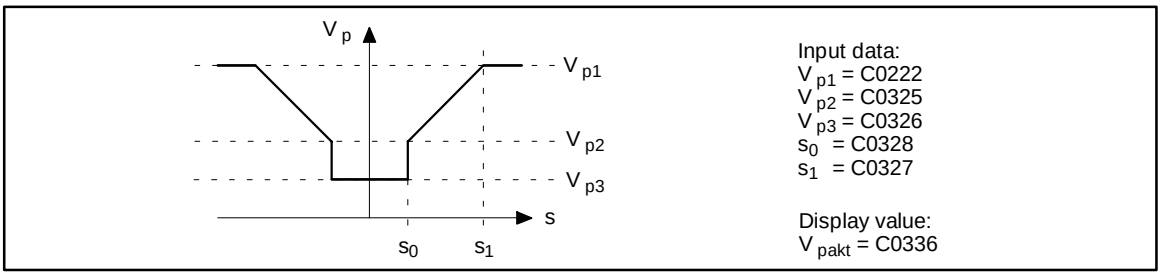

Fig. 7-131 Input of the P-gain derived from the PCTRL-SET process setpoint

  – C0329 = 3
  The input of the P-gain is derived from the control difference and led by the characteristic generation as C0329 = 2.

7.6.41.2 Ramp generator

The setpoint PCTRL-SET is led by a ramp generator with linear characteristic.Thus, setpoint step-changes at the input can be transformed into a ramp.

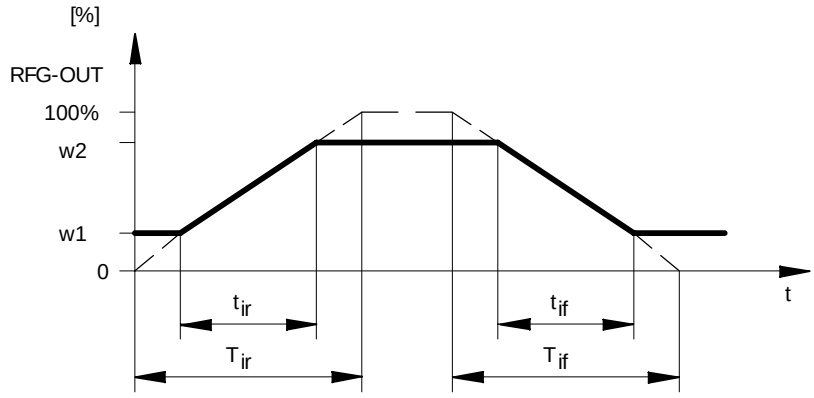

$$T_{ir} = t_{ir}\frac{100\%}{w2 - w1} \qquad T_{if} = t_{if}\frac{100\%}{w2 - w1}$$

Fig. 7-132 Acceleration and deceleration times of the ramp generator

- The ramps can be adjusted separately for acceleration and deceleration.
  – Acceleration time t_{ir} with C0332.
  – Deceleration time t_{if} with C0333.
- PCTRL-INACT = HIGH
  – The ramp generator is immediately set to zero.

7.6.41.3 Value range of the output signal

- The process controller operates bipolar in the default setting.
  – The output value is limited to □100 %.
- The function can be set unipolar under C0337.
  – The output value is limited to 0 ... +100 %.

7.6.41.4 Evaluation of the output signal

- The output signal can be evaluated after the limitation block via PCTRL-INFLU.
  – The process controller can be used or suppressed with this evaluation.
  – The calcuation is done according to the following formula:
  100 % (PCTRL-OUT) = 100 % * 100 % (PCTRL-INFLU).

7.6.41.5 Deactivation of the process controller

- PCTRL-INACT = HIGH deactivates the process controller
  – PCTRL-OUT is set to zero.
  – The I-component is set to zero.
  – The ramp generator is set to zero.

7.6.42 Phase comparator (PHCMP)

Purpose

Compares two phase signals (distances) with each other.

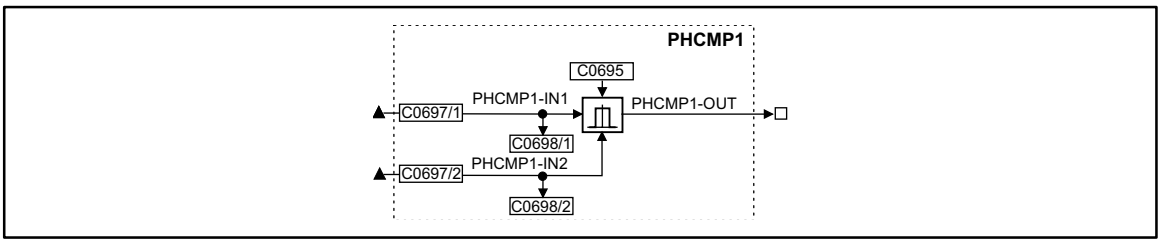

Fig. 7-133 Phase comparator (PHCMP1)

Signal				Source			Note
Name	Type	DIS	DIS format	CFG	List	Lenze	
PHCOMP1-IN1	ph	C0698/1	dec [inc]	C0697/1	3	1000	Signal to be compared
PHCOMP1-IN2	ph	C0698/2	dec [inc]	C0697/2	3	1000	Comparison value
PHCOMP1-OUT	d	-	-	-	-	-	

Function

Function block	Code	Function	Note
PHCMP1	C0695 = 0	• When PHCMPx-IN1 > PHCMPx-IN2 – PHCMPx-OUT = HIGH • When PHCMPx-IN1 ≤ PHCMPx-IN2 – PHCMPx-OUT = LOW	
PHCMP2	C1207 = 0		
PHCMP3	C1272 = 0		
PHCMP1	C0695 = 1	• When | PHCMPx-IN1 | > | PHCMPx-IN2 | – PHCMPx-OUT = HIGH • When | PHCMPx-IN1 | ≤ | PHCMPx-IN2 | – PHCMPx-OUT = LOW	Compares the absolute value of the inputs
PHCMP2	C1207 = 1		
PHCMP3	C1272 = 1		

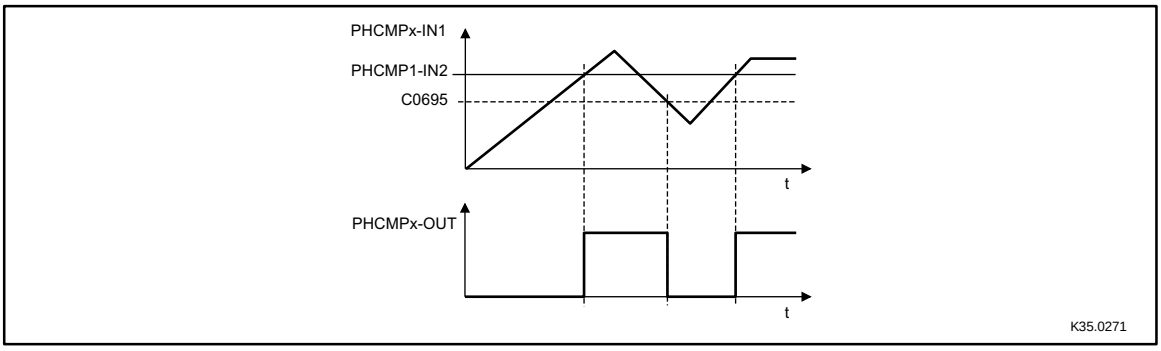

Fig. 7-134 Representation of the function using the example of PHCMP1

7.6.43 Signal adaptation for phase signals (PHDIV)

Purpose

Division or multiplication of phase signals as a power of two.

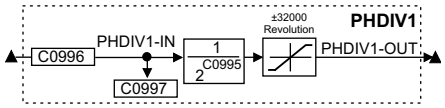

Fig. 7-135 Signal adaptation for phase signals (PHDIV1)

Signal				Source			Note
Name	Type	DIS	DIS format	CFG	List	Lenze	
PHDIV1-IN	ph	C0997	dec [inc]	C0996	3	1000	
PHDIV1-OUT	ph	-	-	-	-	-	65536 inc = one encoder revolution

Function

- Arithmetic function:

$$\text{PHDIV1-OUT} = \frac{\text{PHDIV1-IN}}{2^{\text{C0995}}}$$

  – positive values in C0995 result in a division
  – negative values in C0995 result in a multiplication

- The output value is limited to ±32000 encoder revolutions.
  – If the limit is exceeded, the output is kept at the limit value.

7.6.44 Phase integrator (PHINT)

Purpose

Integrates a speed or a velocity to a phase (distance). The integrator can accept max. ±32000 encoder revolutions.

PHINT3 can recognize a relatively covered distance.

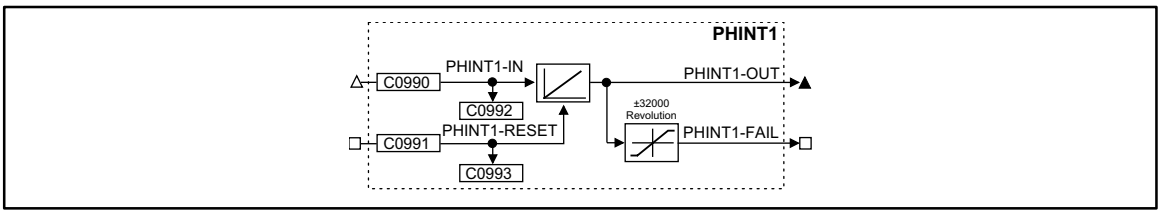

Fig. 7-136 Phase integrator (PHINT1)

Signal				Source		Note
Name	Type	DIS	DIS format	CFG	List	
PHINT1-IN	phd	C0992	dec [rpm]	C0990	4	1 revolution = 65536 increments
PHINT1-RESET	d	C0993	bin	C0091	2	HIGH = sets the phase integrator to 0 and PHINT1-FAIL = LOW
PHINT1-OUT	ph	-	-	-	-	65536 inc = 1 encoder revolution, overflow is possible
PHINT1-FAIL	d	-	-	-	-	HIGH = overflow

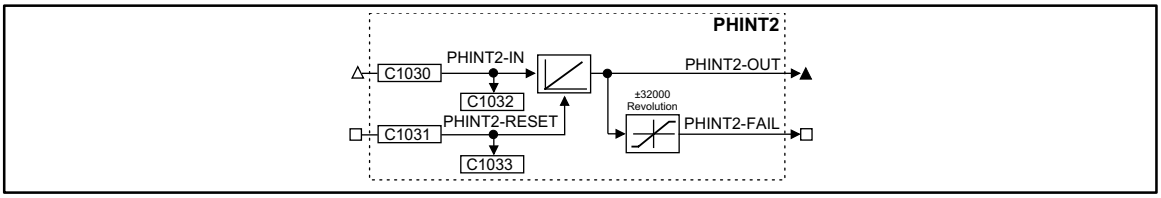

Fig. 7-137 Phase integrator (PHINT2)

Signal				Source		Note
Name	Type	DIS	DIS format	CFG	List	
PHINT2-IN	phd	C1032	dec [rpm]	C1030	4	1 revolution = 65536 increments
PHINT2-RESET	d	C1033	bin	C1031	2	HIGH = sets the phase integrator to zero and PHINT2-FAIL = LOW
PHINT2-OUT	ph	-	-	-	-	65536 inc = 1 encoder revolution, overflow is possible
PHINT2-FAIL	d	-	-	-	-	HIGH = overflow

Function

- Constant input value
- Scaling of PHINTx-OUT

7.6.44.1 Constant input value

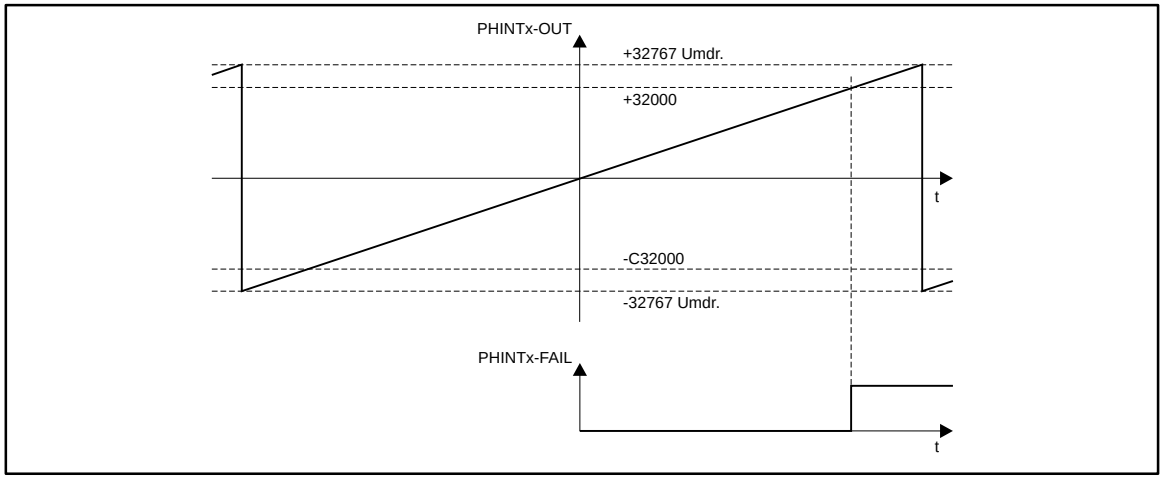

Fig. 7-138 Function of PHINTx with constant input value

- The FB integrates speed or velocity values at PHINTx-IN to a phase (distance).
- PHINTx-OUT outputs the count of the bipolar integrator.
  – A positive value at PHINTx-IN increments the integrator (count is increased).
  – A negative value at PHINTx-IN decrements the integrator (count is reduced).
- If the count exceeds the value of +32767 encoder revolutions (≙ +2147483647 inc)
  – an overflow results. The counting is continued at the value -32768.
  – PHINTx-FAIL switches to HIGH when the value ≥ +32000 is reached
- If the count falls below the value of -32768 encoder revolutions (≙½-2147483648)
  – an overflow results. The counting starts at the value +32767.
  – PHINTx-FAIL switches to HIGH when the value ≤ -32000 is reached.
- PHINTX-RESET = HIGH
  – sets the integrator to 0
  – Sets PHINTx-OUT = 0, as long as a HIGH level is applied to PHINTx-IN.
  – Sets PHINTx-FAIL = LOW.

7.6.44.2 Scaling of PHINTx-OUT

Mathematic description of PHINTx-OUT:

$$\text{PHINTx–OUT[inc]} = \text{PHINTx–IN[rpm]} \cdot \text{t[s]} \cdot 65536\text{[inc/Umdr.]}$$

t = integration time

Example:

You want to determine the count of the integrator with a certain speed at the input and a certain integration time.

- Given values:
  - PHINTx-IN = 1000 rpm
  - t = 10 s
  - Start value of the integrator = 0
- Solution:
  - Conversion of PHINTx-IN:

$$1000\ \text{rpm} = \frac{1000\ \text{rev.}}{60\ \text{s}}$$

  - Calculation of PHINTx-OUT:

$$\text{PHINTx} - \text{OUT} = \frac{1000\ \text{rev.}}{60\ \text{s}} \cdot 10\ \text{s} \cdot \frac{65536\ \text{inc}}{\text{rev.}} = 10922666\ \text{inc}$$

7.6.45 First order delay element (PT1)

Purpose

Filter and delay analog signals.

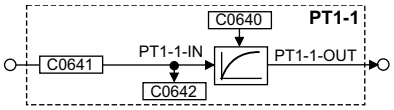

Fig. 7-139 First order delay element (PT1-1)

Signal				Source			Note
Name	Type	DIS	DIS format	CFG	List	Lenze	
PT1-1-IN	a	C0642	dec [%]	C0641	1	1000	-
PT1-1-OUT	a	-	-	-	-	-	-

Function

- The delay T is set under C0640.
- The proportional value is fixed at K = 1.

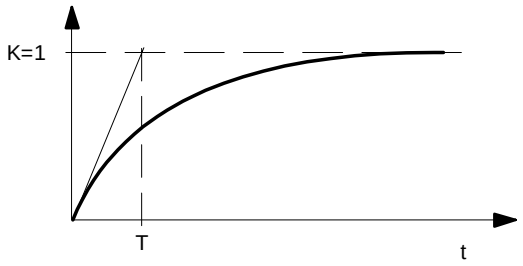

Fig. 7-140 Delay T of the first-order delay element

7.6.46 CW-CCW-QSP link (R/L/Q)

Purpose

The FB links the input of the direction of rotation and the QSP function with a protection against open circuit.

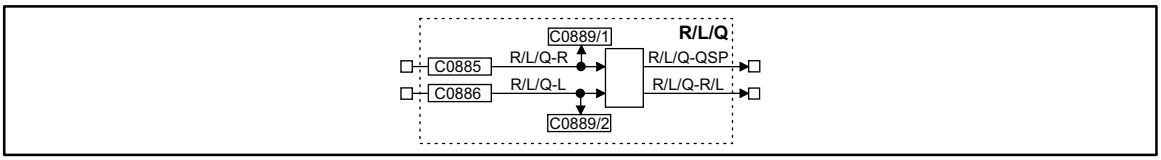

Fig. 7-141 CW-CCW-QSP link (R/L/Q)

Signal				Source			Note
Name	Type	DIS	DIS format	CFG	List	Lenze	
R/L/Q-R	d	C0889/1	bin	C0885	2	51	-
R/L/Q-L	d	C0889/2	bin	C0886	2	52	-
R/L/Q-QSP	d	-	-	-	-	-	-
R/L/Q-R/L	d	-	-	-	-	-	-

Function

- After mains connection and simultaneous HIGH level at both inputs, the outputs are connected as follows:

Inputs		Outputs	
R/L/Q-R	R/L/Q-L	R/L/Q-R/L	R/L/Q-QSP
1	1	0	1

- The following table results, only if one of the inputs was set to LOW once:

Inputs		Outputs	
R/L/Q-R	R/L/Q-L	R/L/Q-R/L	R/L/Q-QSP
0	0	0	1
1	0	1	0
0	1	1	0
1	1	unchanged	unchanged

- If both inputs are set to HIGH during operation, both outputs still have their previously output value.

7.6.47 Homing function (REF)

Purpose

The homing function is used to bring the drive shaft to a specific position.

Tip!

First, select a predefined configuration under C0005, which already includes the REF function block. Thus you make sure that all important signal links are established automatically. Then adapt the configuration to your application.

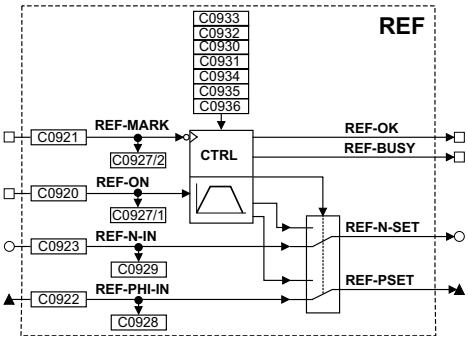

Fig. 7-142 Function block REF

Signal				Source			Note
Name	Type	DIS	DIS format	CFG	List	Lenze	
REF-N-IN	a	C0929	dec [%]	C0923	1	1000	Speed setpoint in % of nmax C0011
REF-PHI-IN	ph	C0928 C0926/2	dec [inc]	C0922	3	1000	Phase setpoint (contouring error for phase controller in FB MCTRL)
REF-ACTPOS-IN	ph	C0926/1	dec [inc]	C0925	3	1000	Loading value for current position (REF-ACTPOS)
REF-ON	d	C0927/1	bin	C0920	2	1000	HIGH = start homing
REF-MARK	d	C0927/2	bin	C0921	2	1000	Home position switch
REF-POS-LOAD	d	C0927/3	bin	C0924	2	1000	LOW-HIGH edge = phase at the input REF-ACTPOS-IN is loaded in REF-ACTPOS (start value)
REF-OK	d	-	bin	-	-	-	HIGH = homing completed/homing known
REF-BUSY	d	-	bin	-	-	-	HIGH = homing function active
REF-N-SET	a	-	dec [%]	-	-	-	Setpoint speed for n-controller
REF-PSET	ph	-	dec [rpm]	-	-	-	Phase setpoint (contouring error for phase controller in FB MCTRL)

Scope of the function

- Profile generator
- Homing modes
- Control via input signals
- Output of status signals

7.6.47.1 Profile generator

The homing speed profile can be adapted to the application.

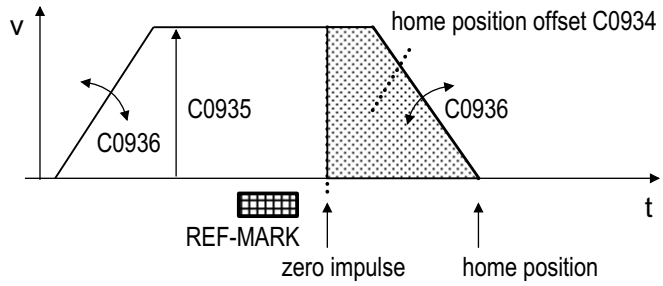

Fig. 7-143 Homing speed profile

Function block library

Code	Meaning	Note
C0930	Gearbox factor numerator, pinion circumference on the motor side	Setting is required only if the feedback encoder is not attached to the motor
C0931	Gearbox factor denominator, pinion circumference on the encoder side	
C0933	Calculate position on the rising or falling edge of the zero track or touch probe	according to the selected mode
C0934	Homing point offset = number of increments after the zero pulse	The reference is: 65536 inc = 1 revolution. An input of up to 2140000000 inc is possible
C0935	Maximum traversing speed	Input % of nmax C0011
C0936	Acceleration / deceleration time	linear ramp
C0926/3	REF-ACTPOS, actual position	display only
C0926/4	REF-TARGET, actual target position	display only

The profile generator calculates the speed profile from the set profile parameters.

- Parameter changes are possible during homing.
  – C0935 and C0936 become effective if REF-ON = LOW.
- The drive should not be operated at the torque limit (MCTRL-MMAX = HIGH), otherwise the drive cannot follow the speed profile.
  – Increase acceleration / deceleration time C0936 until MCTRL-MMAX is no longer activated.
- The phase controller in the MCTRL function block must be switched active.

7.6.47.2 Homing modes

The home position is defined by:

- the homing mode C0932
- the signal edge of the zero pulse or touch probe signal C0933
- the home position offset C0934

Note!
The zero position (depending on the rotor attached to the motor) instead of the zero pulse is effective for position feedback via resolver, and the touch probe phase for homing via touch probe.

Homing with homing switch on zero pulse/zero position

After the negative edge of the homing switch REF-MARK, the home position is at the next zero pulse/zero position plus the home position offset:

- Mode 0 (C0932 = 0):
  – Move to the home position in CW rotation.
  – Enter positive home position offset C0934.

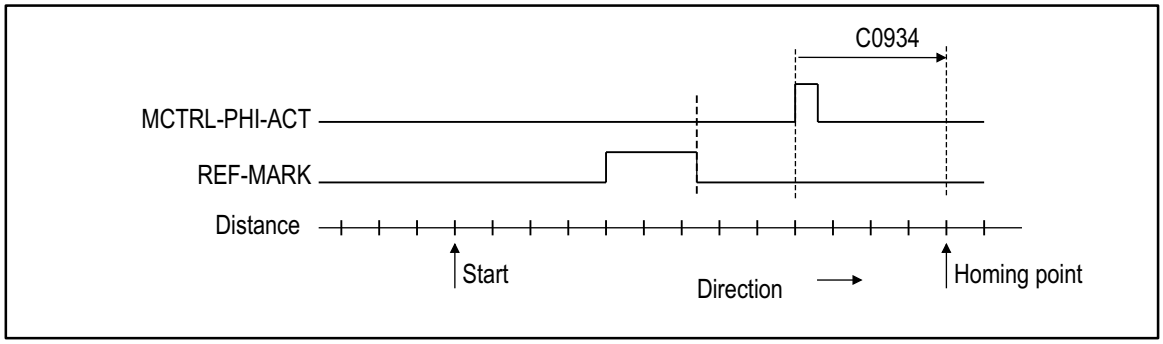

Fig. 7-144 Homing with zero pulse/zero position: Move to the home position in CW rotation.

- Mode 1 (C0932 = 1):
  – Move to the home position in CCW rotation.
  – Enter negative home position offset C0934.

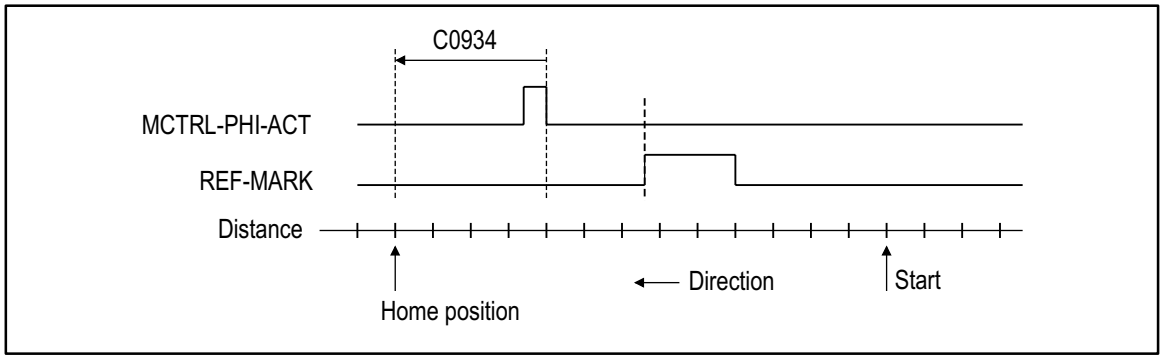

Fig. 7-145 Homing with zero pulse/zero position: Move to the home position in CCW rotation.

Homing with home switch and touch probe (TP)

After the negative edge of the homing switch RER-MARK, the home position is at the touch probe signal (terminal X5/E4) plus the home position offset:

- Mode 6 (C0932 = 6):
  – Move to the home position in CW rotation.
  – Enter positive home position offset C0934.

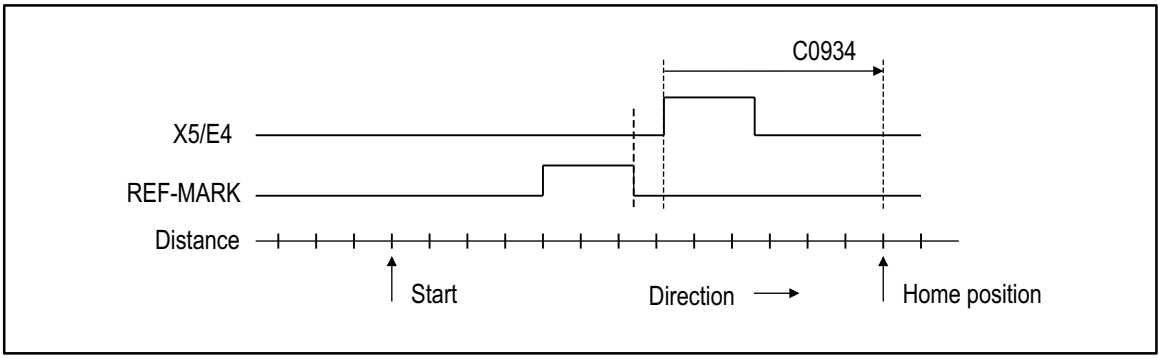

Fig. 7-146 Homing with touch probe: Move to the home position in CW rotation.

- Mode 7 (C0932 = 7):
  – Move to the home position in CCW rotation.
  – Enter negative home position offset C0934.

Homing with touch probe (TP)

The home position is at the next touch probe signal (terminal X5/E4) plus the home position offset.

- Mode 8 (C0932 = 8):
  – Move to the home position in CW rotation.
  – Enter positive home position offset C0934.
- Mode 9 (C0932 = 9):
  – Move to the home position in CCW rotation.
  – Enter negaitive home position offset C0934.

Direct homing

The home position is on the home position offset.

- Mode 20 (C0932 = 20):
  - The drive moves from the actual position (REF-ACTPOS) to the home position immediately after the activation (REF-ON = HIGH).
  - The actual position (REF-ACTPOS) can previously be loaded with the input value REF-ACTPOS-IN (see Chapter 7.6.47.3).
  - The distance and direction results from the actual position (REF-ACTPOS) and the set home position offset (C0934).

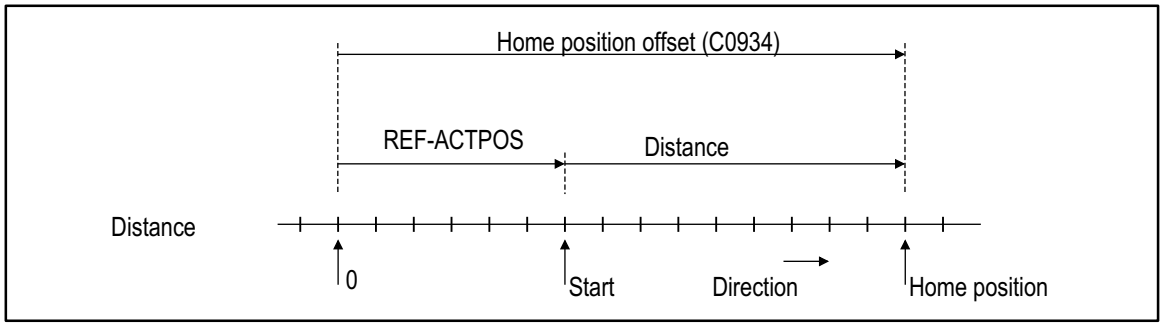

Fig. 7-147 Direct homing; move to the home position in CW rotation

- Mode 21 (C0932 = 21) as mode 20, but in addition:
  - The actual position (REF-ACTPOS) is loaded during mains disconnection and is loaded again with mains connection.

7.6.47.3 Control via input signals

- REF-ON = HIGH (edge) starts homing:
  - The input must remain HIGH until homing is completed. Homing is canceled when the input is set to LOW before the home position is reached.
- REF-ON = LOW interrupts homing:
  - The drive is decelerated to zero speed along the ramp set under C0936.
  - The inputs REF-N-IN and REF-PHI-IN are connected to the outputs REF-N-SET and REF-PSET.
  - Has no effect when homing is already completed (REF-BUSY = LOW).
- REF-POS-LOAD = LOW-HIGH edge
  - The profile generator accepts the phase applied at input REF-ACTPOS-IN as a start value for the actual position REF-ACTPOS.
  - The function is effective only if REF-ON = LOW.
  - The function is effective only in modes 20 and 21.

7.6.47.4 Output of status signals

- REF-BUSY = HIGH: homing is active:
  – The profile generator is connected to the outputs REF-PSET and REF-N-SET.
- REF-BUSY = LOW: homing is not active or completed:
  – The inputs REF-PHI-IN and REF-N-IN are connected to the outputs REF-PSET and REF-N-SET.
- REF-OK = HIGH: homing was completed successfully:
  – Homing is completed if the setpoint of the profile generator has reached the home position.
  – A possible contouring error is transmitted to the function block DFSET and compensated (see Chapter 7.6.47.5) unless the drive is operated in its torque limitation.
- REF-OK = LOW:
  – homing is currently executed
  OR
  – the home position is no longer known, e.g. due to an interference OR
  – homing was interrupted.

7.6.47.5 Connection of the function block

- REF-PSET supplies the phase setpoint belonging to REF-N-SET (contouring error) for the phase controller in the MCTRL function block.
  – Both signals (REF-PSET and REF-N-SET) must be processed for a correct homing.
- The homing function must be connected to the function block DFSET (see signal flow chart for the configurations 5000, 6000 or 7000).
  – Otherwise, phase errors may occur which add up.

7.6.48 Ramp generator (RFG)

Purpose

The ramp generator limits the rise of signals.

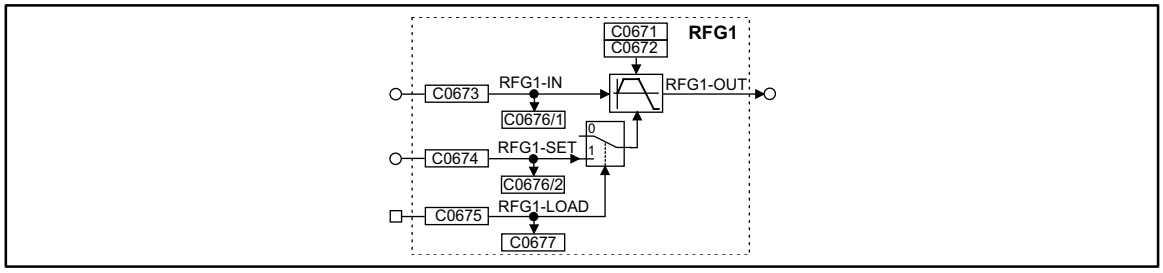

Fig. 7-148 Ramp generator (RFG1)

Signal				Source			Note
Name	Type	DIS	DIS format	CFG	List	Lenze	
RFG1-IN	a	C0676/1	dec [%]	C0673	1	1000	-
RFG1-SET	a	C0676/2	dec [%]	C0674	1	1000	-
RFG1-LOAD	d	C0677	-	C0675	2	1000	-
RFG1-OUT	a	-	-	-	-	-	-

Function

- Calculation and setting of the times T_{ir} and T_{if}
- Loading of the ramp generator

7.6.48.1 Calculation and setting of the times T_{ir} and T_{if}

The acceleration time and deceleration time refer to a change of the output value from 0 to 100 %. The times T_{ir} and T_{if} to be set can be calculated as follows:

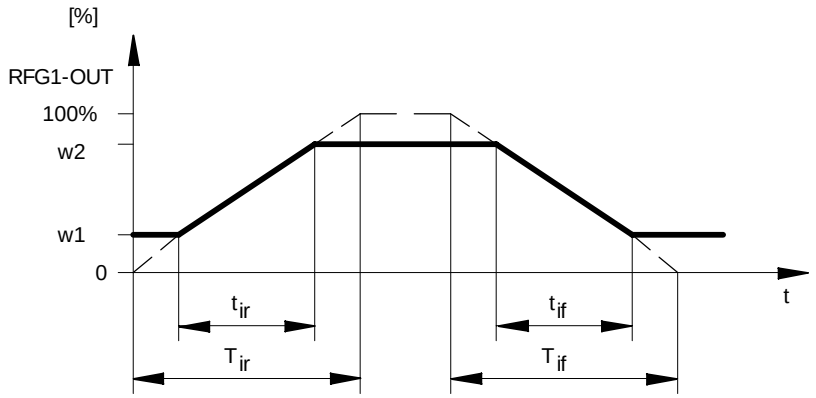

$$T_{ir} = t_{ir} \frac{100\%}{w2 - w1} \qquad T_{if} = t_{if} \frac{100\%}{w2 - w1}$$

Fig. 7-149 Acceleration and deceleration times of the ramp generator

Here, t_{ir} and t_{if} are the desired times for the change between w_1 and w2. The calculated times T_{ir} and T_{if} can be set under C0671 and C0672.

7.6.48.2 Loading of the ramp generator

The ramp generator can be initialized with defined values via the inputs RFG1-SET and RFG1-LOAD.

- As long as the input RFG1-LOAD = HIGH, the input RFG1-SET is switched to the output.
- If the input RFG1-LOAD = LOW, the ramp generator accelerates from this value to its input value via the set T_i times.

7.6.49 Sample and hold function (S&H)

Purpose

The FB can save analog signals. The saved value is also available after mains disconnection.

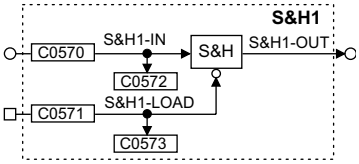

Fig. 7-150 Sample and hold function (S&H1)

Signal				Source			Note
Name	Type	DIS	DIS format	CFG	List	Lenze	
S&H1-IN	a	C0572	dec [%]	C0570	1	1000	
S&H1-LOAD	d	C0573	bin	C0571	2	1000	LOW = save
S&H1-OUT	a	-	-	-	-	-	

Function

- With S&H1-LOAD = HIGH the signal at the input S&H1-IN is switched to the output S&H1-OUT.
- With S&H1-LOAD = LOW the output S&H1-OUT is disconnected from the input S&H1-IN and outputs the value which was last valid.

Saving in the case of mains disconnection:

- Keep S&H1-LOAD to LOW level when disconnecting the supply voltage (mains, DC bus or terminal 59).
- Keep S&H1-LOAD to LOW level when connecting the supply voltage (mains, DC bus or terminal 59).

7.6.50 S-shaped ramp generator (SRFG)

Purpose

The function block is used to evaluate a setpoint via an S-shape ($\sin^2$ shape).

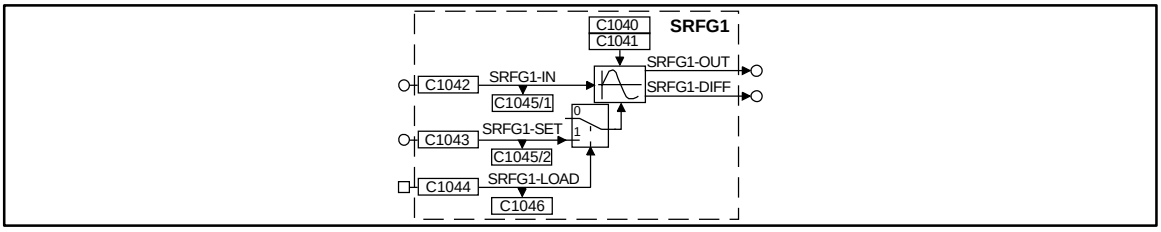

Fig. 7-151 S-shaped ramp generator (SRFG1)

Signal				Source		Note
Name	Type	DIS	DIS format	CFG	List	
SRFG1-IN	a	C1045/1	dec [%]	C1042	1	Input
SRFG1-SET	a	C1045/2	dec [%]	C1043	1	Start value for the ramp generator, acceptance when SRFG1-LOAD = High
SRFG1-LOAD	d	C1046	bin	C0144	2	HIGH = accepts the value at SRFG1-SET and supplies it to SRFG1-OUT; SRFG1-DIFF remains at 0 %
SRFG1-OUT	a	-	-	-	-	Output limited to ±100 %
SRFG1-DIFF	a	-	-	-	-	Output limited to ±100 %, supplies the acceleration of the ramp generator

SRFG1-LOAD

- The ramp generator is loaded (set) with the signal of SRFG1-SET via the digital input SRFG1-LOAD.
- This value is immediately accepted, i.e. there is no S-shaped acceleration or deceleration (the output jumps to this value).
- As long as SRFG-LOAD = HIGH, the ramp generator remains inhibited.

Function

The maximum acceleration and the jolt can be adjusted separately.

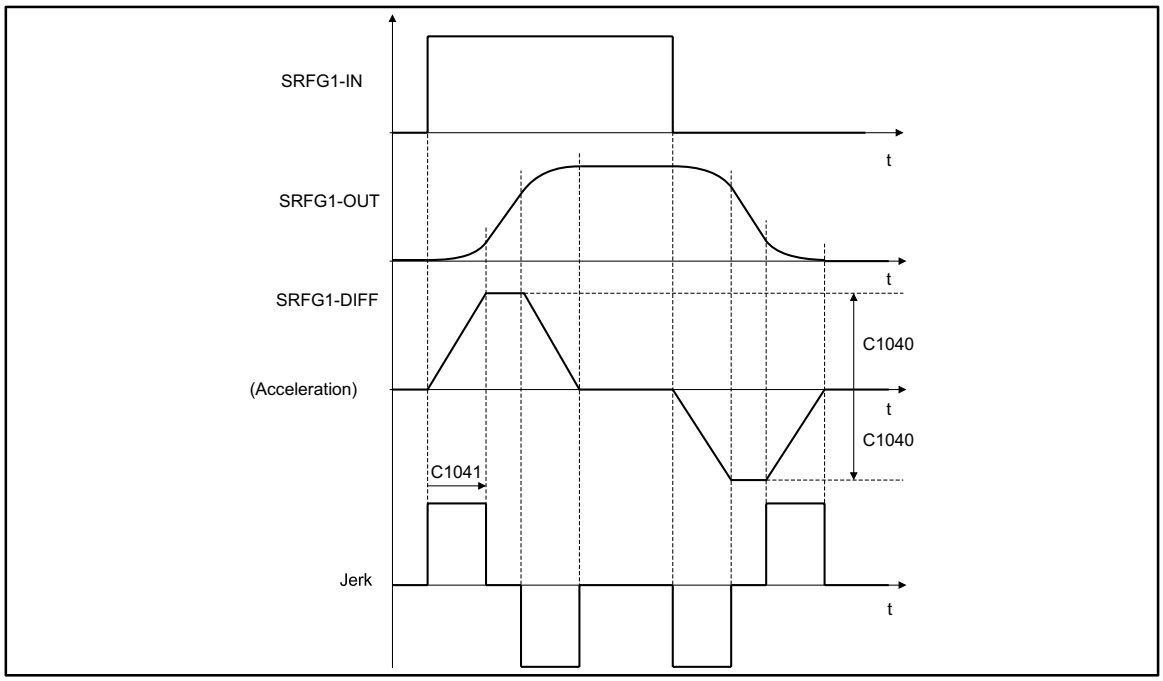

Fig. 7-152 Line diagram

- Max. acceleration:
  – For the positive as well as for the negative acceleration, C1040 applies.
  – The setting is calculated according to the formula:

$$T_{ir\ lin} = 1s \cdot \frac{W_2\,[\%] - W_1\,[\%]}{C1040\,[\%]}$$

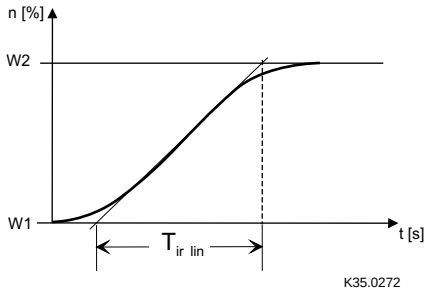

- Jolt (C1041):
  – The jolt is entered in [s] until the ramp generator operates with maximum acceleration (see Fig. 7-152).

7.6.51 Output of digital status signals (STAT)

Purpose

The FB evaluates digital signals of the function blocks and the status of the controller and passes them on to C0150 and to the FB AIF-OUT and CAN-OUT1.

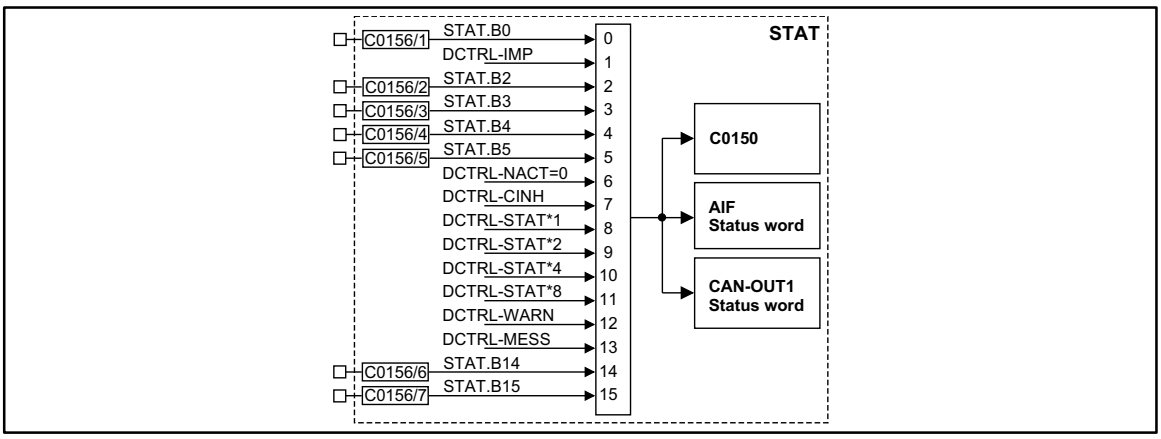

Fig. 7-153 Output of digital status signals (STAT)

Signal				Source			Note
Name	Type	DIS	DIS format	CFG	List	Lenze	
STAT.B0	d	-	bin	C0156/1	2	2000	
STAT.B2	d	-	bin	C0156/2	2	5002	
STAT.B3	d	-	bin	C0156/3	2	5003	
STAT.B4	d	-	bin	C0156/4	2	5050	
STAT.B5	d	-	bin	C0156/5	2	10650	
STAT.B14	d	-	bin	C0156/6	2	505	
STAT.B15	d	-	bin	C0156/7	2	500	

Function

The status word consists of some linked (DCTRL-xxxx-) and some freely linkable signal inputs (STAT.Bx).

- Digital signal sources can be freely assigned to the inputs STAT.Bx.
- The corresponding bit in the data word is marked with STAT.Bx (e.g. STAT.B0 for the LSB)
- The Statuswort is transferred to code C0150 and to the function blocks AIF-OUT, CAN-OUT1, CAN-OUT2, and CAN-OUT1.
- The inputs with the name DCTRL-xxxx are directly accepted from the function block DCTRL. (📖 7-95)

7.6.52 Control of a drive network (STATE-BUS)

Purpose

The FB controls the controllers to specified states (e.g. trip, trip reset, quick stop or controller inhibit).

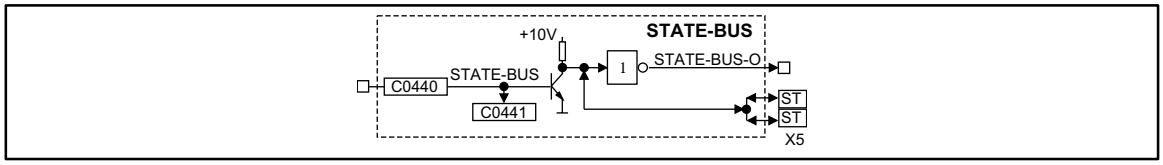

Fig. 7-154 Control of a function block STATE-BUS

Signal				Source			Note
Name	Type	DIS	DIS format	CFG	List	Lenze	
STATE-BUS	d	C0441	bin	C0440	2	1000	
STATE-BUS-O	d	-	-	-	-	-	
TERMINA X5/ST	d	-	-	-	-	-	

Function

The STATE-BUS is a device-specific bus system which is designed for Lenze controllers only. The function block STATE-BUS acts on the terminals X5/ST or reacts on a LOW signal at these terminals (multimaster ability).

- Every connected controller can set these terminals to LOW signal.
- All connected controllers evaluate the signal level at these terminals and control the function blocks which are internally configured.
- Up to 20 controllers can be connected.

Stop!

Do not apply an external voltage at terminal X5/ST.

7.6.53 Edge evaluation (TRANS)

Purpose

This function is used to evaluate digital signal edges and convert them into pulses with a defined time.

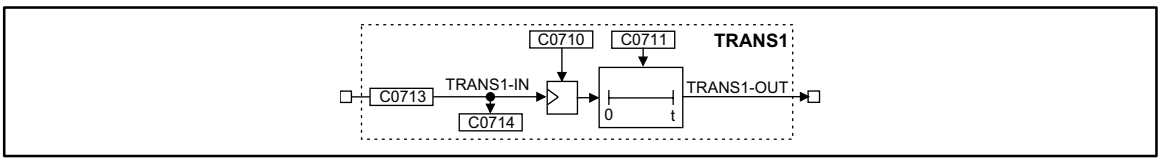

Fig. 7-155 Edge evaluation (TRANS1)

Signal				Source			Note
Name	Type	DIS	DIS format	CFG	List	Lenze	
TRANS1-IN	d	C0714	bin	C0713	2	1000	-
TRANS1-OUT	d	-	-	-	-	-	-

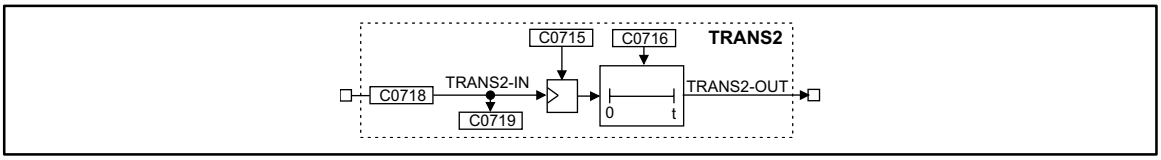

Fig. 7-156 Edge evaluation (TRANS2)

Signal				Source			Note
Name	Type	DIS	DIS format	CFG	List	Lenze	
TRANS2-IN	d	C0719	bin	C0718	2	1000	-
TRANS2-OUT	d	-	-	-	-	-	-

Function

This FB is an edge evaluator which can be retriggered. This FB can react on different events. The following functions can be selected under code C0710 or C0716:

- Positive edge
- Negative edge
- Positive or negative edge

7.6.53.1 Evaluate positive edge

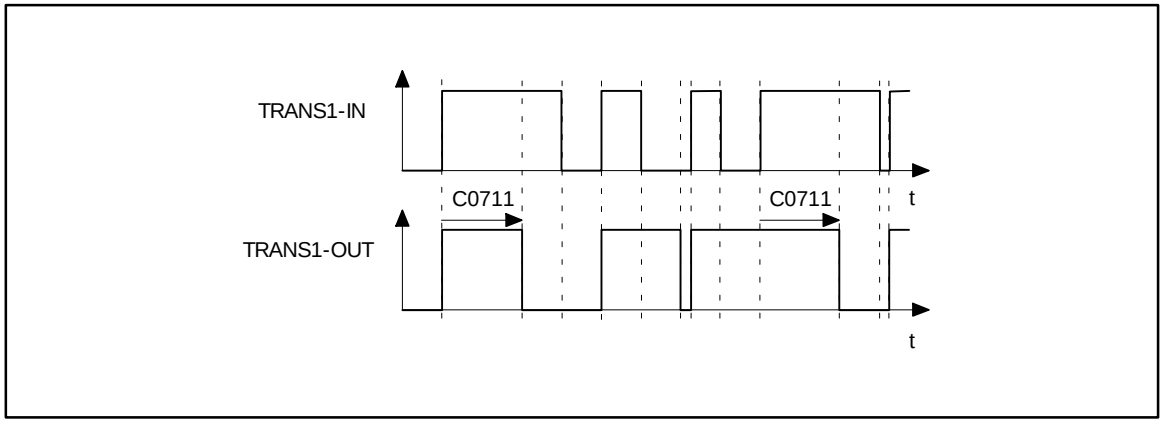

Fig. 7-157 Evaluation of positive edges (TRANS1)

- The output TRANSx-OUT is set to HIGH as soon as a LOW-HIGH edge is sent to the input.
- After the time set under C0711 or C0716 has elapsed, the output changes again to LOW unless there is another LOW-HIGH edge at the input.

7.6.53.2 Evalute negative edge

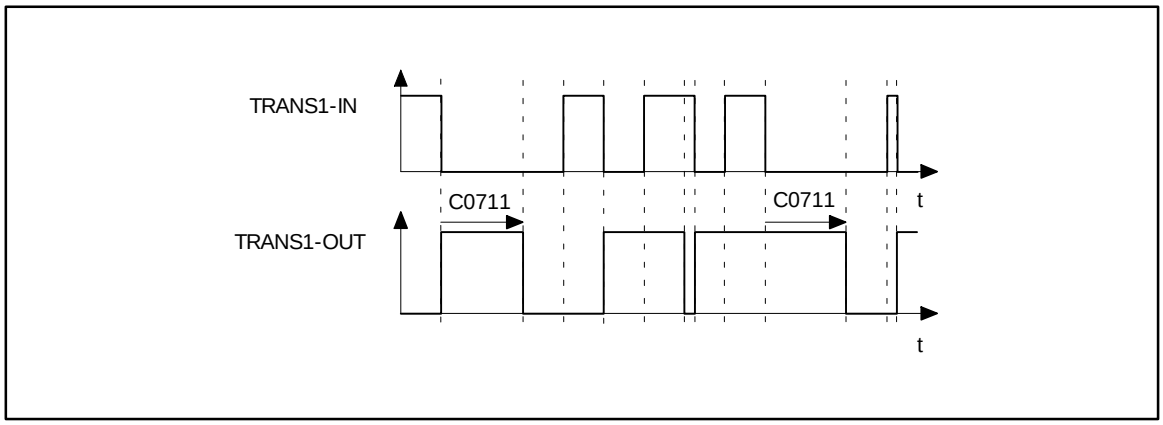

Fig. 7-158 Evaluation of negative edges (TRANS1)

- The output TRANSx-OUT is set to HIGH as soon as a HIGH-LOW edge is sent to the input.
- After the time set under C0711 or C0716 has elapsed, the output changes again to LOW, unless there is another HIGH-LOW edge at the input.

7.6.53.3 Evaluate positive or negative edge

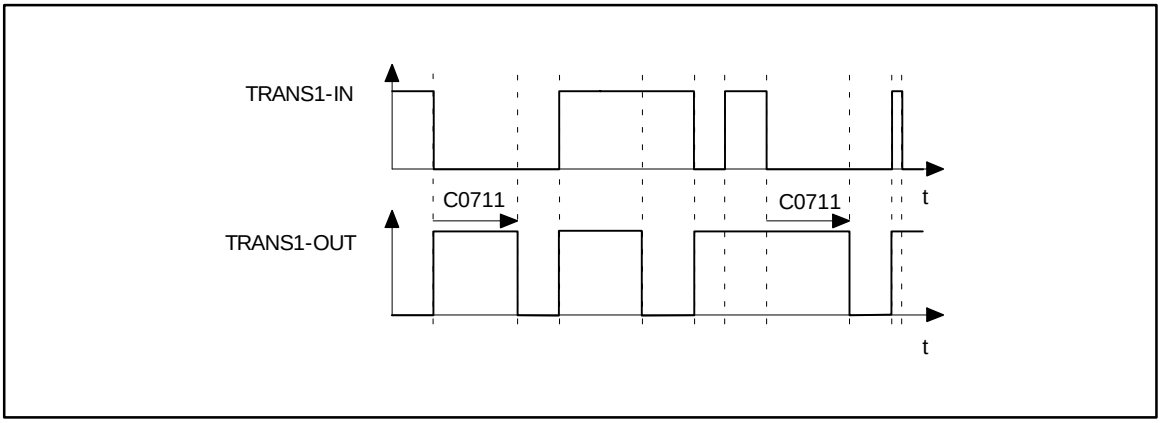

Fig. 7-159 Evaluation of positive and negative edges (TRANS1)

- The output TRANSx-OUT is set to HIGH as soon as a HIGH-LOW edge or a LOW-HIGH edge is sent to the input.
- After the time set under C0711 or C0716 has elapsed, the output changes again to LOW unless there is another HIGH-LOW edge or LOW-HIGH edge at the input.

7.7 Parameter setting

- The parameter setting of the controller is used to adapt the drive to your applications.
- The complete parameter set is organized in codes which are consecutively numbered and always begin wit h”C” (see code table”, (📖 7-186)).
- You can save the parameter set for your application.
  – One parameter set is available.
  – When delivered, the parameter set is factory-set.

7.7.1 Ways of parameterization

There are two ways of changing parameters:

- Using the operating module
- Using a higher-level host (PS or PLC) via fieldbus modules and programs.

On the following pages you will learn how to change parameters using the Global Drive Control program.

Tip!

Chapter 7.2.3 shows you how to work efficiently and conveniently with GDC. (📖 7-2)

7.7.2 Change parameters

The parameterization can be explained using the following example:

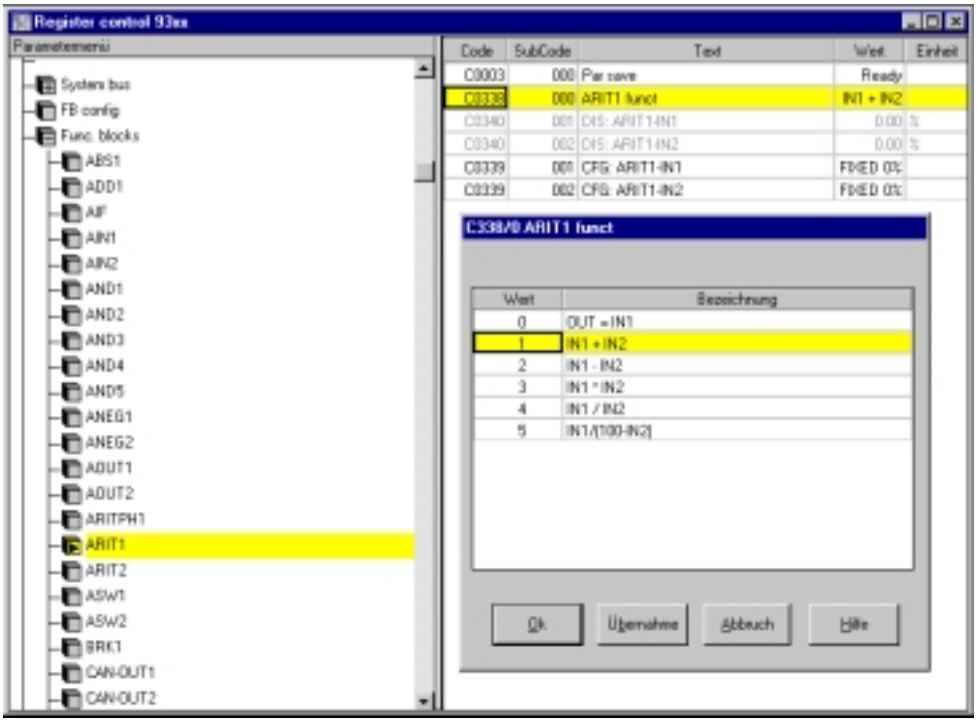

Fig. 7-160 Parameterization of the FB “ARIT1:Arithmetics”

Step	Command	Function
1.	Initiate parameter menu	
2	Open menu ”Function blocks”.	Displays all FB menus.
3.	Example: Open menu “ARIT1:Arithmetics”.	Opens the parameter table for FB ARIT1.
4.	Example: Click on C0338 “ARIT1 Function”.	All available functions are displayed. ● Select function which the FB is to execute. Confirm with “OK”.
5.	Click on C0003 ” Save parameter set”.	Saves the parameter set permanently. All available parameter sets are displayed. ● Select ”PSet 1”. Confirm with “OK”.

Tip!

Sves the modified parameter set in a file on the hard disk of your PC or on diskette. You can use it for other applications or for other controllers.

7.7.3 Parameter set transfer

Warning!

The controller is being new initialized because of the parameter set transfer from the PC to the controller: System configuration and terminal assignments can have changed!

- Ensure, that your wiring and drive configuration correspond to the settings of the parameter set.
- Only use terminal X5/28 or the STOP function of GDC as source for the controller inhibit.

A parameter set transfer is only possible when the controller is inhibited.

You can transfer complete parameter sets from one controller to another using the Global Drive Control PC program.

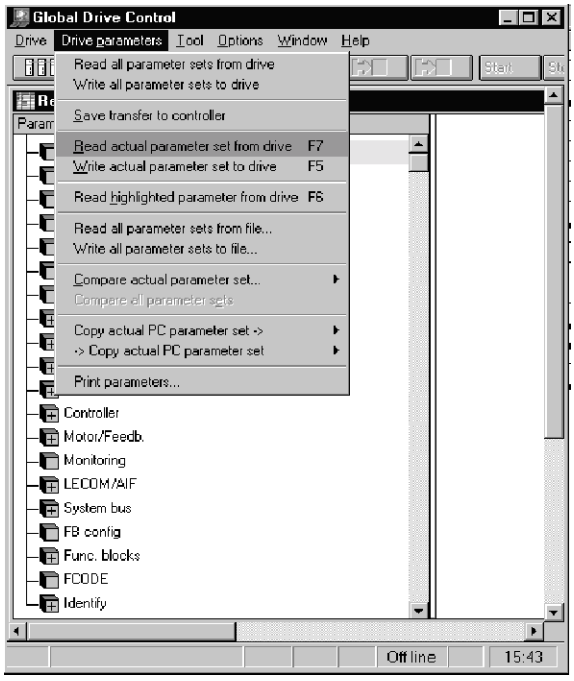

93reg005

Fig. 7-161 Dialog box "Read parameter set from file"

Configuration

Step	Command		Function
	On the PC of the first controller (source):		
1.		Select "Read actual parameter set from controller" in the "Drive parameters" menu.	Loads the current parameter set from the first controller to the PC. Under C0002 you can select between: ● Loading of factory setting (C0002=0) ● Loading of customer-specific parameter set (C0002=1)
2		Select "Write all parameter sets to file" in the "Drive parameters" menu.	Saves the parameter sets in a file on the hard disk or a data carrier. ● Save the parameter sets on a diskette.
3.			● Insert the diskette into the PC's drive of the second controller.
	On the PC of the second controller (destination):		
4.		Select "Read all parameter sets from file" in the "Drive parameters" menu.	Loads the parameter sets from a file to the hard disk or a data carrier. ● Load the parameter sets of the first controller from the diskette.
5.		Select "Write actual parameter set to the controller" in the "Drive parameters" menu.	Transmits the current parameter set from the PC to the second controller. ● You can save the data non-volatile in the menu "Parameter set management".
6.			Check whether your wiring and drive configuration correspond to the settings of the new parameter set.
7.			Deactivate the controller inhibit (terminal X5/28=HIGH).

7.7.3.1 Password protection

Code	LCD	Possible settings		IMPORTANT
		Lenze	Choice	
C0094	Password	0	0 9999	Password ● Parameter access protection for the operating module. When the password is activated, only the codes of the user menus can be accessed. For further selection possibilities see C0096 .

You can restrict the code access via the operating module using the password protection in C0094.

- Reading C0094 using the operating module:
  – C0094 = 0: password protection is not activated.
  – C0094 = 9999: password protection is activated.
- Activate password protection:
  – Enter four-digit number in C0094.
  – Confirm using SH + PRG.
- Deactivate password protection:
  – Enter four-digit number again.
  – All other inputs are refused.

Effect

- Working with the operating module:
  – The codes listed in the USER menu can still be read and changed.
  – All other codes are no longer displayed.

7.8 Monitoring

Various monitoring functions protect the drive from impermissible operating conditions.

If a monitoring function is activated,

- the corresponding reaction is triggered. (📖Chapter “Reactions”)
- a digital output is set, if it is assigned to the corresponding reaction.
- the indication is entered in position 1 in the history buffer. (📖 8-3)

7.8.1 Reactions

The controller reacts on four different operating faults:

- TRIP (highest priority)
- Message
- FAIL-QSP
- Warning
- Off=no reaction (lowest priority)

For some operating faults, you can determine the controller reactions
(📖 7-181, chapter “Set reactions”)

TRIP

- Switches the power outputs U, V, W to a high resistance until TRIP is reset
- The drive is idling (no control!).
- After TRIP reset the drive moves to its setpoint along the set ramps. (📖 8-10)

Message

- Switches the power outputs U, V, W to a high resistance as long as the fault is active.
- Short-term fault $\leq$ 0.5 s
  – The drive is idling (no control!), as long as the fault is active.
  – If the fault is eliminated, the drive moves to its setpoint with maximum torque.
- Long-term fault $>$ 0.5 s
  – The drive is idling (no control!), as long as the fault is active.
  – Controllers are reset.
  – Position setpoint = act. position

Danger!

The drive restarts automatically after the fault has been eliminated.

Warning

- The drive operates under control.

Off

- No reaction on operating faults! Monitoring is deactivated.

Stop!

Switched-off monitoring functions can destroy the drive.

FAIL-QSP

Decelerates the drive to standstill within a defined time. Setpoint selections for delays in program sets are not considered.

- Brakes the drive to standstill along the QSO ramp.
- The time for the QSP ramp is set via the dialog box "Basic settings".
- Factory setting of FAIL-QSP: (📖 8-6)

7.8.2 Setting of reactions

1. Click "Parameter menu" in the "Basic settings" dialog box.
2. Select the menu "Dialog Diagnostics" by a double click.

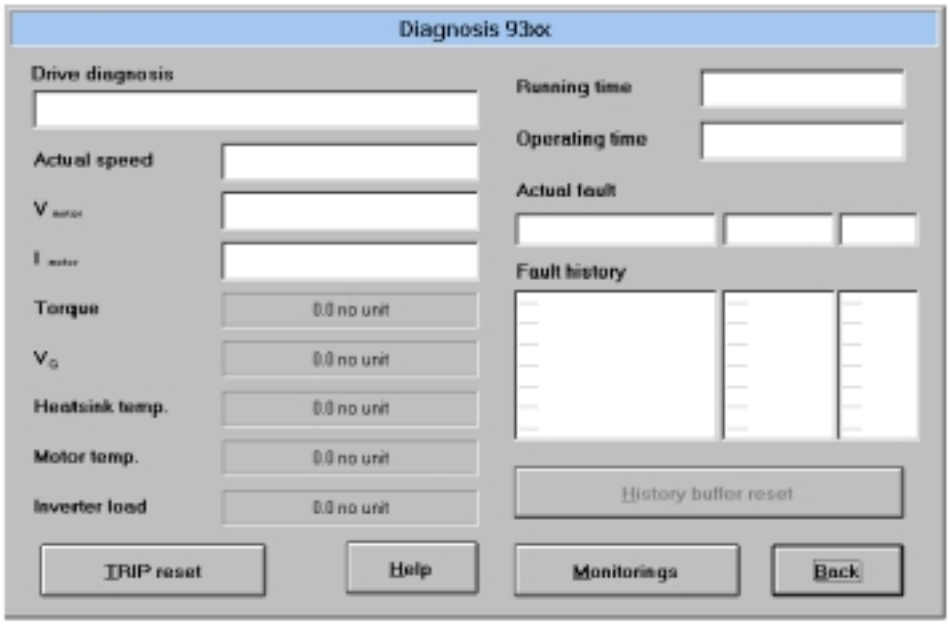

Fig. 7-162 Dialog box "Diagnostics 9300"

3. Click the button "Monitorings...".

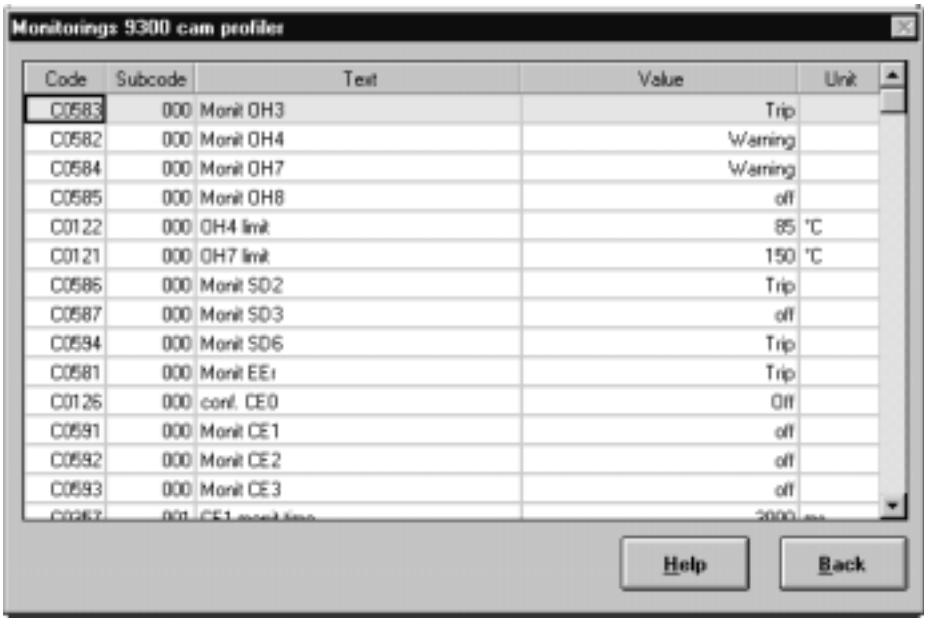

Fig. 7-163 Dialog box "Monitoring configuration 93xx"

4. Click the desired monitoring function.
5. Confirm possible and allowed reactions with "OK".

The following chapter gives an overview of all monitoring functions and their settings.

7.8.3 Monitoring functions

Overview of the fault sources detected by the controller and the corresponding reactions

Fault message		Possible reactions					
Display	**Meaning**	**T**	**M**	**W**	**Q**	**off**	**Code**
CCr	System fault	●	-	-	-	-	-
CE0	Communication error (AIF)	✓	-	✓	-	●	C0126
CE1	Communication error at the process data input object CAN-IN1 (time monitoring can be set under C0357/1)	✓	-	✓	-	●	C0591
CE2	Communication error at the process data input object CAN-IN2 (time monitoring can be set under C0357/2)	✓	-	✓	-	●	C0592
CE3	Communication error at the process data input object CAN-IN3 (time monitoring can be set under C0357/3)	✓	-	✓	-	●	C0593
CE4	BUS-OFF state (many communication errors occurred)	✓	-	✓	-	●	C0595
EEr	External monitoring	●	✓	✓	✓	✓	C0581
H05	Internal fault	●	-	-	-	-	-
H07	Internal fault	●	-	-	-	-	-
H10	Sensor fault heat sink temperature	●	-	-	-	✓	C0588
H11	Sensor fault: indoor temperature	●	-	-	-	✓	
LP1	Motor phase failure detection (function block must be entered in C0465)	✓	-	✓	-	●	C0597
LU	Undervoltage	-	●	-	-	-	-
NMAX	Maximum speed exceeded (C0596)	●	-	-	-	-	-
OC1	Short circuit	●	-	-	-	-	-
OC2	Earth fault	●	-	-	-	-	-
OC5	I x t overload	●	-	-	-	-	-

Fault message		Possible reactions					
Display	**Meaning**	**T**	**M**	**W**	**Q**	**off**	**Code**
OH	Heat sink temperature 1 (max. permissible, fixed)	●	-	-	-	-	-
OH3	Motor temperature 1 (max. permissible, fixed)	●	-	-	-	✓	C0583
OH4	Heat sink temperature 2 (adjustable; C0122)	-	-	●	-	✓	C0582
OH7	Motor temperature 2 (can be set; code: C0121)	-	-	●	-	✓	C0584
OH8	Motor temperature (fixed) via inputs T1/T2	✓	-	✓*	-	●	C0585
OU	Overvoltage on the DC bus	-	●	-	-	-	-
P01	Limit switch negative = LOW	✓	-	-	●	-	C1285/1
P02	Limit switch positive = LOW	✓	-	-	●	-	C1285/2
P03	Contouring error - digital frequency > C0255	✓	-	●	-	✓	C0589
P04	Position limit negative exceeded	✓	-	-	●	-	C1285/3
P05	Position limit positive exceeded	✓	-	-	●	-	C1285/4
P06	No reference	✓	-	-	●	-	C1287/1
P07	Parameter set mode absolute	✓	-	-	●	-	C1291/1
P08	Actual offset out of range	✓	-	-	●	-	C1291/2
P09	Impermissible programming	✓	-	-	●	-	C1291/3
P12	Encoder range exceeded	✓	-	-	●	-	C1288/1
P13	Phase overflow	●	-	✓	-	✓	C0590
P14	1st contouring error POS > C1218/1	✓	-	✓	●	✓	C1286/1
P15	2nd contouring error POS > C1218/2	✓	-	✓	✓	●	C1286/2
P16	Sync error	✓	-	✓	●	✓	C1290/1
P17	TP control error	✓	-	✓	●	✓	C1289/1
P18	Internal limitation	✓	-	●	✓	✓	C1289/2
PEr	Program error	●	-	-	-	-	-
PI	Fault during initialization	●	-	-	-	-	-
PR0	General fault in parameter sets	●	-	-	-	-	-
PR1	Fault in parameter set 1	●	-	-	-	-	-
Sd2	Resolver fault	●	-	✓*	-	✓	C0586
Sd3	Encoder fault at X9 PIN 8	✓	-	✓*	-	●	C0587
Sd5	Encoder fault at X6/1 X6/2 (C0034 = 1)	✓	-	✓	-	●	C0598
Sd6	Sensor fault: motor temperature (X7 or X8)	●	-	✓	-	✓	C0594
Sd7	Fault in the absolute value encoder at X8	✓	-	-	-	●	C0025

T	TRIP	●	Lenze
M	Message	✓	possible
W	Warning	-	not possible
Q	Fault/QSP	✓*	possible, the drive may be destroyed if the fault is not removed immediately

Overcurrent diagram of the fault indication ”OC5”

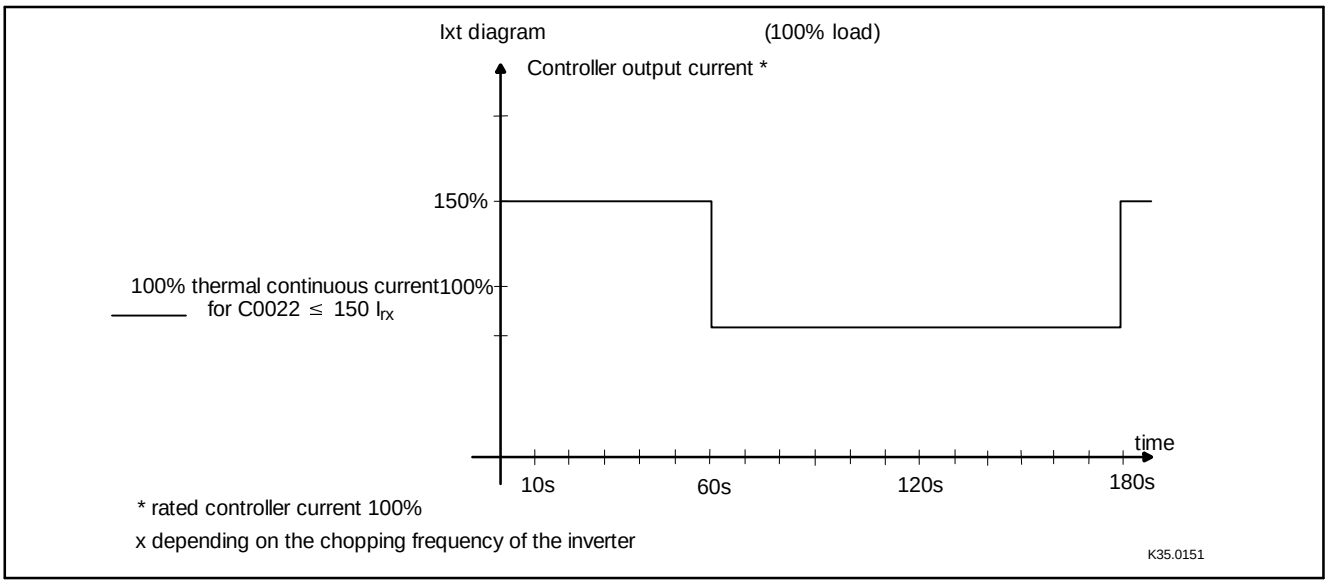

Fig. 7-164 Max. permitted overcurrent depending on the time

Show/Hide Bookmarks

EDS9300-RD4.2
00412733

Lenze

Manual
Part D4.2

Code table

Global Drive

Servo register controller 9300

This documentation is valid for the servo register controllers 9300 as of version:

33.932X	ER	2G	1x	(9321 - 9329)
33.933X	ER	2G	1x	(9330 - 9332)
33.932X	CR	2G	1x	Cold Plate (9321 - 9328)

Type

Desgin:
E = Enclosure IP20
C = Cold Plate
xK = Cam profiler
xP = Position controller
xR = Register controller
xS = Servo inverter

Hardware level and index

Software level and index

Variant

Explanation

© 1999 Lenze GmbH & Co KG

Without written approval of Lenze Lenze GmbH & Co KG no part of these Instructions must be copied or given to third parties.

All indications given in these Operating instructions have been selected carefully and comply with the hardware and software described. Nevertheless, deviations cannot be ruled out. We do not take any responsibility or liability for damages which might possibly occur. Required corrections will be made in the following editions.

Version 1.0 12/99

Contents

Part D4.2

7.9 Code table 7-186
7.9.1 Function blocks 7-189
7.9.2 Freely assignable codes 7-220
7.9.3 Display codes 7-221
7.9.4 Fault and monitoring functions 7-222
7.10 Selection list 7-225
7.11 Table of attributes 7-230
7.12 Selection list - motors 7-244

Contents

7.9 Code table

How to read the code table:

Column	Abbreviation	Meaning
Code	C0039 1 2 … 14 15	Code C0039 Subcode 1 of code C0039 Subcode 2 of code C0039 … Subcode 14 of code C0039 Subcode 15 of code C0039
	[C0005]	Parameter value of the code can only be modified when controller is inhibited
LCD		Keypad LCD ● DIS: ... Only display ● CFG: ... Configured value is indicated on the LCD of the keypad ● All other are parameter values
Lenze		Factory setting of the code
	*	The column "Important" contains further information
Selection	1 {1 %} 99	Minimum value {smallest step/unit} maximum value
IMPORTANT	-	Additional, important explanation of the code
	🕮 7-186	Reference on page with further information on the code

Code	LCD	Possible settings			IMPORTANT	
		Lenze	Choice			
C0002	Par load	0			Load parameter set	
			0	Load default	Load factory setting into RAM	
			1 2 3 4	Load PS1 Load PS2 Load PS3 Load PS4	Load parameter set x into the RAM and activate ● Parameter set1 is loaded automatically after every mains connection.	
			11 12 13 14	Load ext PS1 Load ext PS2 Load ext PS3 Load ext PS4	Load parameter set x from the operating module into the RAM and activate	
			20	ext → EEPROM	Transmit all parameter sets from the operating module to the controller and store non-volatile	
C0003	Par save	0			Save parameter set	
			0	Ready	Saving completed	
			1 2 3 4	Save PS1 Save PS2 Save PS3 Save PS4	Save current parameter set x non-volatile	
			11	Save extern	Save all parameter sets to the operating module	
C0004	Op-display	56	All available codes		Operating display Operating module shows selected code in the operating level if no other status indications of C0183 are active. e	
[C0005]	Signal CFG	30000			Signal configuration (Predefined basic configurations)	
			0	Common	Modified basic configuration	
			1 2 11	CFG:86xx -1- CFG:86xx -2- CFG:86xx -11-	Compatible to frequency inverter 86xx: C005 = -1-/-2-/-11-	
			100	CFG:empty	All internal connections are removed	

Code	LCD	Possible settings		IMPORTANT
		Lenze	Choice	
			Speed control 1000 Speed mode 1001 Speed 1 1003 Speed 3 1005 Speed 5 1010 Speed 10 1011 Speed 11 1013 Speed 13 1015 Speed 15 1100 Speed 100 1101 Speed 101 1103 Speed 103 1105 Speed 105 1110 Speed 110 1111 Speed 111 1113 Speed 113 1115 Speed 115	The digit indicates the predefined controller control ● xxx1: RS232, RS485 or fiber-optics ● xxx3: InterBus-S or Profibus ● xxx5: Systembus (CAN) The last digit but one indicates the predefined voltage source for the control terminals ● xx0x: external supply voltage ● xx1x: internal voltage supply via X5/A1 The last digit but two indicates additional functions ● x1xx: Brake control ● x9xx: in case of quick stop the complete connection of drives is phase-controlled to zero speed
			Torque control with speed limitation 4000 Torque mode 4001 Torque 1 4003 Torque 3 4005 Torque 5 4010 Torque 10 4011 Torque 11 4013 Torque 13 4015 Torque 15	
			Master for digital frequency coupling 5000 DF mst 5001 DF mst 1 5003 DF mst 3 5005 DF mst 5 5010 DF mst 10 5011 DF mst 11 5013 DF mst 13 5015 DF mst 15 5900 DF mst QSP 5901 DF mst QSP1 5903 DF mst QSP3 5905 DF mst QSP5 5910 DF mst QSP10 5911 DF mst QSP11 5913 DF mst QSP13 5915 DF mst QSP15	
			Slave to digital frequency bus 6000 DF slv bus 6001 DF slv bus 1 6003 DF slv bus 3 6005 DF slv bus 5 6010 DF slv bus 10 6011 DF slv bus 11 6013 DF slv bus 13 6015 DF slv bus 15	
			Slave to digital frequency cascade 7000 DF slv cas 7001 DF slv cas 1 7003 DF slv cas 3 7005 DF slv cas 5 7010 DF slv cas 10 7011 DF slv cas 11 7013 DF slv cas 13 7015 DF slv cas 15	

Configuration

Code	LCD	Possible settings				IMPORTANT	
		Lenze	Choice				
			Register control 30000 RC standard 30003 RC 3 30010 RC 10 30013 RC 13				
C0009	LECOM address	1	1	{1}	99	Controller address Bus device number when operated via interface ● 10, 20, ..., 90 reserved for broadbast to device groups for RS232, RS485, fibre optics.	
C0021	Slipcomp	0.00	0.00	{0.01 %}	20.00	Slip compensation ● active only in sensorless control below the value of C0291	
C0037	Set-value rpm	0	-16000	{1 rpm}	16000	Setpoint input in rpm	
C0094	Password	0	0		9999	Password ● Parameter access protection for the operating module. When the password is activated, only the codes of the user menus can be accessed.	📖 7-179
C0125	Baud rate	0	0 9600 baud 1 4800 baud 2 2400 baud 3 1200 baud 4 19200 baud			LECOM baud rate for 2102 module	
C0142	Start options	1	0 Start lock 1 Auto start			0 = Start protection 1 = automatic start	
[C0172]	OV reduce	10	0	{10 V}	100	Threshold to activate the brake torque reduction before OU fault	
[C0173]	UG limit	1				Adaptation of DC bus voltage thresholds ● check during commissioning and adapt, if necessary ● all drive components in DC bus connections must have the same thresholds	
			0 Mains<400V+-B			Operation on mains <400 V with or without brake unit	
			1 Mains=400V+-B			Operation on 400 V mains with or without brake unit	
			2 Mains=460V+-B			Operation on 460 V mains with or without brake unit	
			3 Mains=480V-B			Operation on 480 V mains without brake unit	
			4 Mains=480V+B			Operation on 480 V mains with brake unit	
[C0469]	Fct STP key					Function of the STOP key of the operating module ● Function is activated when pressing the STOP key.	
		2	0 inactive 1 CINH 2 QSP			Deactivated Controller inhibit Quick stop	

7.9.1 Function blocks

Code	LCD	Possible settings				IMPORTANT	
		Lenze	Choice				
ABS							📖 7-49
[C0661]	CFG: IN	1000	FIXED 0 %		→ Selection list 1	Configuration analog input absolute-value generator ABS1	📖 7-225
C0662	DIS: IN		-199.99	{0.01 %}	199.99	Analog input signal of ABS1	
ADD							📖 7-50
[C0610] 1 2 3	 CFG: IN CFG: IN CFG: IN	 1000 1000 1000	 FIXED 0 % FIXED 0 % FIXED 0 %		→ Selection list 1	Configuration analog inputs of addition block ADD1 ● Adds inputs IN1, IN2 and IN3	📖 7-225
C0611 1 2 3	 DIS: IN DIS: IN DIS: IN		-199.99	{0.01 %}	199.99	Analog input signals of ADD1	
AIF							📖 7-51
C0136 3	 DIS: CTRLWORD		0	{1}	65535	Control word in AIF-IN	
C0151	DIS: FDO (DW)		output signals configured with C0116			Hexadecimal signal assignment of the free digital outputs. ● binary interpretation indicates the bit states	
[C0850] 1 2 3	 CFG: OUT.W1 CFG: OUT.W2 CFG: OUT.W3	 1000 1000 1000	 FIXED0% FIXED0% FIXED0%		→ Selection list 1	Configuration process output words for automation interface AIF (X1)	📖 7-225
[C0851] 1	 CFG: OUT.D1	 1000	 FIXED0INC		→ Selection list 3	Configuration 32-bit phase information	📖 7-225
C0852	Type OUT.W2	0	0 analog 1 digital 0-15 2 D1: low phase 3 D2: high phase			Configuration process output word 2 for automation interface AIF (X1)	
C0853	Type OUT.W3	0	0 analog 1 digital 16-31 2 high phase			Configuration process output word 3 for automation interface AIF (X1)	
C0854	Type OUT.W1	0	0 analog 3 D2: low phase			Configuration process output word 1 for automation interface AIF (X1)	
C0855	DIS: IN (0-15) ` DIS: IN (16-31)		0		FFFF	Process input words hexadecimal for automation interface X1	
C0856 1 2 3	 DIS: IN.W1 DIS: IN.W2 DIS: IN.W3		-199.99	{0.01%}	199.99	Process input words decimal ● 100% = 16384	
C0857	DIS: IN.D1		-2147483648	{1}	2147483647	32-bit phase information	
C0858 1 2 3	 DIS: OUT.W1 DIS: OUT.W2 DIS: OUT.W3		-199.99	{0.01 %}	199.99	Process output words ● 100% = 16384	
C0859	DIS: OUT.D1		-2147483648	{1}	2147483647	32-bit phase information	
[C1195]	CFG: OUT.D2	1000	FIXED0INC		→ Selection list 3	Configuration input phase signal of AIF	📖 7-225
C1196	DIS: OUT.D2		-2147483647	{1}	2147483647	Input signal of AIF	
C1197	DIS:IN.D2		-2147483647	{1}	2147483647	AIF-IN.D2	
AIN							📖 7-56
C0034	Mst current	0	0 -10 V ... + 10 V 1 +4 mA ... +20 mA 2 -20 mA ... +20 mA			Selection: Master voltage/master current for setpoint input	
C0400	DIS: OUT		-199.99	{0,01 %}	199.99	Output of AIN1	
[C0402]	CFG: OFFSET	19502	FCODE-26/1		→ Selection list 1	Configuration offset of AIN1	📖 7-225

Configuration

Code	LCD	Possible settings				IMPORTANT	
		Lenze	Choice				
[C0403]	CFG: GAIN	19504	FCODE-27/1		→ Selection list 1	Configuration gain of AIN1	📖 7-225
C0404 1 2	 DIS: OFFSET DIS: GAIN		-199.99	{0.01 %}	199.99	Input signals of AIN1	
C0405	DIS: OUT		-199.99	{1 %}	199.99	Output of AIN2	
[C0407]	CFG: OFFSET	19503	FCODE-26/2		→ Selection list 1	Configuration offset of AIN2	📖 7-225
[C0408]	CFG: GAIN	19505	FCODE-27/2		→ Selection list 1	Configuration gain of AIN2	📖 7-225
C0409 1 2	 DIS: OFFSET DIS: GAIN		-199.99	{0.01 %}	199.99	Input signals of AIN2	
AND							📖 7-58
[C0820] 1 2 3	 CFG: IN CFG: IN CFG: IN	 1000 1000 1000	 FIXED0 FIXED0 FIXED0		→ Selection list 2	Configuration digital inputs of the AND element AND1	📖 7-225
C0821 1 2 3	 DIS: IN DIS: IN DIS: IN					Digital input signals of AND1	
[C0822] 1 2 3	 CFG: IN CFG: IN CFG: IN	 1000 1000 1000	 FIXED0 FIXED0 FIXED0		→ Selection list 2	Configuration digital inputs of the AND element AND2	📖 7-225
C0823 1 2 3	 DIS: IN DIS: IN DIS: IN					Digital input signals of AND2	
[C0824] 1 2 3	 CFG: IN CFG: IN CFG: IN	 1000 1000 1000	 FIXED0 FIXED0 FIXED0		→ Selection list 2	Configuration digital inputs of the AND element AND3	📖 7-225
C0825 1 2 3	 DIS: IN DIS: IN DIS: IN					Digital input signals of AND3	
[C0826] 1 2 3	 CFG: IN CFG: IN CFG: IN	 1000 1000 1000	 FIXED0 FIXED0 FIXED0		→ Selection list 2	Configuration digital inputs of the AND element AND4	📖 7-225
C0827 1 2 3	 DIS: IN DIS: IN DIS: IN					Digital input signals of AND4	
[C0828] 1 2 3	 CFG: IN CFG: IN CFG: IN	 1000 1000 1000	 FIXED0 FIXED0 FIXED0		→ Selection list 2	Configuration digital inputs of the AND element AND5	📖 7-225
C0829 1 2 3	 DIS: IN DIS: IN DIS: IN					Digital input signals of AND5	
ANEG							📖 7-61
[C0700]	CFG: IN	19523	FCODE-472/3		→ Selection list 1	Configuration input of von ANEG1	📖 7-225
C0701	DIS: IN		-199.99	{0.01 %}	199.99	Input signal of ANEG1	
[C0703]	CFG: IN	1000	FIXED 0 %		→ Selection list 1	Configuration input of ANEG2	📖 7-225
C0704	DIS: IN		-199.99	{0.01 %}	199.99	Input signal ANEG2	
AOUT							📖 7-62
[C0431]	CFG: IN	5001	MCTRL-NACT		→ Selection list 1	Configuration input of AOUT1	📖 7-225

Code	LCD	Possible settings			IMPORTANT	
		Lenze	Choice			
[C0432]	CFG: OFFSET	19512	FCODE-109/1	→ Selection list 1	Configuration offset of AOUT1	📖 7-225
[C0433]	CFG: GAIN	19510	FCODE-108/1	→ Selection list 1	Configuration gain of AOUT1	📖 7-225
C0434 1 2 3	 DIS: IN DIS: OFFSET DIS: GAIN		-199.99 {0.01 %} 199.99		Input signals of AOUT1	
[C0436]	CFG: IN	5002	MCTRL-MSET2	→ Selection list 1	Configuration input of AOUT2	📖 7-225
[C0437]	CFG: OFFSET	19513	FCODE-109/2	→ Selection list 1	Configuration offset of AOUT2	📖 7-225
[C0438]	CFG: GAIN	19511	FCODE-108/2	→ Selection list 1	Configuration gain of AOUT2	📖 7-225
C0439 1 2 3	 DIS: IN DIS: OFFSET DIS: GAIN		-199.99 {0.01 %} 199.99		Input signals of AOUT2	
ARIT						📖 7-64
C0338	ARIT1 funct	1	0 OUT = IN1 1 IN1 + IN2 2 IN1 - IN2 3 IN1 * IN2 4 IN1 / IN2 5 IN1/(100 - IN2)		Function arithmetic block ARIT1 ● links inputs IN1 and IN2	
[C0339] 1 2	 CFG: IN CFG: IN	 1000 1000	 FIXED 0 % FIXED 0 %	→ Selection list 1	Configuration arithmetic blockARIT1	
C0340 1 2	 DIS: IN DIS: IN				Input signals arithmetic block ARIT1	
C0600	Function	1	0 OUT = IN1 1 IN1 + IN2 2 IN1 - IN2 3 IN1 * IN2 4 IN1 / IN2 5 IN1/(100 - IN2)		Function arithmetic block ARIT2 ● links inputs IN1 and IN2	
[C0601] 1 2	 CFG: IN CFG: IN	 1000 1000	 FIXED 0 % FIXED 0 %	→ Selection list 1	Configuration analog inputs of ARIT2	📖 7-225
C0602 1 2	 DIS: IN DIS: IN		-199.99 {0.01 %} 199.99		Analog input signals of ARIT2	
ARITPH						📖 7-67
C1010	Function	1	0 OUT = IN1 1 IN1 + IN2 2 IN1 - IN2 3 IN1 * IN2 14 IN1 / IN2		Function of ARITPH1	
[C1011] 1 2	 CFG: IN CFG: IN	 1000 1000	 FIXED0INC FIXED0INC	→ Selection list 3	Configuration inputs ARITPH1	📖 7-225
C1012 1 2	 DIS: IN DIS: IN		-2147483647 {1} 2147483647		Input signals ARITPH1	
ASW						📖 7-68
[C0810] 1 2	 CFG: IN CFG: IN	 1000 1000	 AIN2-OUT FIXED0%	→ Selection list 1	Configuration analog inputs of analog switch ASW1	📖 7-225
[C0811]	CFG: SET	1000	FIXED0	→ Selection list 2	Configuration digital input of ASW1	📖 7-225
C0812 1 2	 DIS: IN DIS: IN		-199.99 {0.01 %} 199.99		Analog input signals of ASW1	

Configuration

Code	LCD	Possible settings		IMPORTANT	
		Lenze	Choice		
C0813	DIS: SET			Digital input signal of ASW1	
[C0815] 1 2	 CFG: IN CFG: IN	 1000 1000	→ Selection list 1 FIXED0% FIXED0%	Configuration analog inputs of analog switch ASW2	🕮 7-225
[C0816]	CFG: SET	1000	FIXED0 → Selection list 2	Configuration digital input of ASW2	🕮 7-225
C0817 1 2	 DIS: IN DIS: IN		-199.99 {0.01 %} 199.99	Analog input signals of ASW2	
C0818	DIS: SET			Digital input signal of ASW2	
BRK					🕮 7-69
C0195	BRK1 T act	99.9	0.0 {0.1 s} 99.9 99.9 s infinite	Brake engaging time ● Engaging time of the mechanical holding brake (see technical data of the brake). ● after the time elapsed under C0195, the status "mechanical brake closed" is reached	
C0196	BRK T release	0.0	0.0 {0.1 s} 60.0	Brake disengaging time ● Disengaging time of the mechanical holding brake (see technical data of the brake). ● After time has elapsed under C0195, the status "mechanical brake closed" is reached	
C0244	BRK M set	0.00	-100.00 {0.01 %} 100.00 100 % = value of C0057	Holding torque of the DC injection brake	
[C0450]	CFG: NX	1000	FIXED 0 % → Selection list 1	Configuration analog input of BRK1	🕮 7-225
[C0451]	CFG: ON	1000	FIXED 0 → Selection list 2	Configuration digital input of BRK1	🕮 7-225
[C0452]	CFG: SIGN	1000	FIXED 0 % → Selection list 1	Configuration analog input of BRK1	🕮 7-225
C0458 1 2	 DIS: NX DIS: SIGN		-199.99 {0.01 %} 199.99	Analog input signals of BRK1	
C0459	DIS: ON			Digital input signal of BRK1	
CAN-Bus					🕮 7-73
[C0350]	CAN address	1	1 {1} 63	CAN bus node address	
[C0351]	CAN baudrate	0	0 500 kbit/s 1 250 kbit/s 2 125 kbit/s 3 50 kbit/s 4 1000 kbit/s	CAN bus baud rate	
[C0352]	CAN mst	0	0 slave 1 Master	Install CAN bus master operation	
C0358	Reset node	0	0 no function 1 CAN reset	Install CAN bus reset node	
C0359	CAN state	0	0 Operational 1 Pre-Operat 2 Warning 3 Bus off	CAN bus status ● display only	

Code	LCD	Possible settings				IMPORTANT	
		Lenze	Choice				
C0360		0	0	{1}	65535	Telegram counter (number of telegrams) ● display only ● for values > 65535 the counting restarts at 0	
1	Message OUT					all sent	
2	Message IN					all received	
3	Message OUT1					sent to CAN-OUT1	
4	Message OUT2					sent to CAN-OUT2	
5	Message OUT3					sent to CAN-OUT3	
6	Message POUT1					sent to parameter channel1	
7	Message POUT2					sent to parameter channel1	
8	Message IN1					received from CAN-IN1	
9	Message IN2					received from CAN-IN2	
10	Message IN3					received from CAN-IN3	
11	Message PIN1					received from parameter channel1	
12	Message PIN2					received from parameter channel2	
C0361		0	0	{1 %}	100	CAN bus load ● display only ● To ensure a perfect operation, the total bus load (all connected devices) should be less than 80%	
1	Load OUT					all sent	
2	Load IN					all received	
3	Load OUT1					sent to CAN-OUT1	
4	Load OUT2					sent to CAN-OUT2	
5	Load OUT3					sent to CAN-OUT3	
6	Load POUT1					sent to parameter channel1	
7	Load POUT2					sent to parameter channel1	
8	Load IN1					received from CAN-IN1	
9	Load IN2					received from CAN-IN2	
10	Load IN3					received from CAN-IN3	
11	Load PIN1					received from parameter channel1	
12	Load PIN2					received from parameter channel2	
[C0364]	CFG:CAN activ	1000	FIXED 0		→ Selection list 2	Activate process data externally Change over from pre-operation to operation	🕮 7-225
C0365	DIS:CAN activ		0		1	Input signal CAN active	
CAN-IN							🕮 7-73
C0136			0	{1}	65535	Control word in CAN-IN	
2	DIS: CTRLWORD						
C0863			0		FFFF	Process input words hexadecimal for system bus (CAN)	
1	DIS: IN3 dig0						
2	DIS: IN2 dig16						
3	DIS: IN2 dig0						
4	DIS: IN3 dig16						
5	DIS: IN3 dig0						
6	DIS: IN3 dig16						
C0866			-199.99	{0.01 %}	199.99	Process input words for system bus (CAN) ● 100% = 16384	
1	DIS: IN1.W1						
2	DIS: IN1.W3						
3	DIS: IN2.W1						
4	DIS: IN2.W2						
5	DIS: IN2.W3						
6	DIS: IN2.W4						
7	DIS: IN2.W4						
8	DIS: IN3.W1						
9	DIS: IN3.W2						
10	DIS: IN3.W3						
11	DIS: IN3.W4						

Configuration

Code	LCD	Possible settings				IMPORTANT	
		Lenze	Choice				
C0867			-2147483648	{1}	2147483647	32-bit phase information for system bus (CAN)	
1	DIS: IN1.D1						
2	DIS: IN2.D1						
3	DIS: IN3.D1						
CAN-OUT							📖 7-80
C0151	DIS: FDO (DW)		output signals configured with C0116			Hexadecimal signal assignment of the free digital outputs. ● binary interpretation indicates the bit states	
C0353						Source for CAN bus IN/OUT addresses	
1	CAN addr sel1	0	0	C350			
2	CAN addr sel2	0	1	C354			
3	CAN addr sel3	0					
C0354			1	{1}	512	CAN bus IN/OUT node addresses	
1	IN1 addr2	129					
2	OUT1 addr2	1					
3	IN2 addr2	257					
4	OUT2 addr2	258					
5	IN3 addr2	385					
6	OUT3 addr2	386					
C0355			0	{1}	2047	CAN bus identifier	
1	CAN-IN1 Id						
2	CAN-OUT1 Id						
3	CAN-IN2 Id						
4	CAN-OUT2 Id						
5	CAN-IN3 Id						
6	CAN-OUT3 Id						
C0356			0	{1 ms}	65000	CAN bus time settings	
2	CAN-OUT2 T	0					
3	CAN-OUT3 T	0					
[C0357]			0	{1 ms}	65000	CAN bus monitoring time for I_{rx}	
1	CE1monit time	3000					
2	CE2monit time	3000					
3	CE3monit time	3000					
[C0860]					→ Selection list 1	Configuration process output words for system bus output blocks (CAN)	📖 7-225
1	CFG: OUT1.W1	5001	FIXED0%				
2	CFG: OUT1.W2	1000	FIXED0%				
3	CFG: OUT1.W3	1000	FIXED0%				
4	CFG: OUT2.W1	1000	FIXED0%				
5	CFG: OUT2.W2	1000	FIXED0%				
6	CFG: OUT2.W3	1000	FIXED0%				
7	CFG: OUT2.W4	1000	FIXED0%				
8	CFG: OUT3.W1	1000	FIXED0%				
9	CFG: OUT3.W2	1000	FIXED0%				
10	CFG: OUT3.W3	1000	FIXED0%				
11	CFG: OUT3.W4	1000	FIXED0%				
[C0861]					→ Selection list 3	Configuration 32-bit phase information for system bus output blocks (CAN)	📖 7-225
1	CFG: OUT1.D1	1000	FIXED0INC				
2	CFG: OUT2.D1	1000	FIXED0INC				
3	CFG: OUT3.D1	13202	FIXED0INC				
C0864						Configuration process output words for system bus (CAN)	
1	Type OUT1.W2	0	0	analog sign			
2	Type OUT2.W1	0	1	digital 0-15			
3	Type OUT3.W1	0	2	low phase			
C0865						Configuration process output words for system bus (CAN)	
1	Type OUT1.W3	0	0	analog sign			
2	Type OUT2.W2	0	1	digital 16-31			
3	Type OUT3.W2	0	2	high phase			

Code	LCD	Possible settings				IMPORTANT	
		Lenze	Choice				
C0868 1 2 3 4 5 6 7 8 9 10 11	 DIS: OUT1.W1 DIS: OUT1.W2 DIS: OUT1.W3 DIS: OUT2.W1 DIS: OUT2.W2 DIS: OUT2.W3 DIS: OUT2.W4 DIS: OUT3.W1 DIS: OUT3.W2 DIS: OUT3.W3 DIS: OUT3.W4		-199.99	{0.01 %}	199.99	Process output words system bus (CAN) ● 100% = 16384	
C0869 1 2 3	 DIS: OUT1.D1 DIS: OUT2.D1 DIS: OUT3.D1		-2147483648	{1}	2147483647	32-bit phase information for system bus (CAN)	
CMP							📖 7-84
C0680	Function	6	1 IN1 = IN 2 2 IN 1 > IN2 3 IN 1 < IN2 4 |IN1| = |IN2| 5 |IN1| > |IN2| 6 |IN1| < |IN2|			Function comparator CMP1 ● Compares the inputs IN1 and IN2	
C0681	Hysteresis	1.00	0.00	{0.01 %}	100.00 %	Hysteresis of CMP1	
C0682	Window	1.00	0.00	{0.01 %}	100.00 %	Window of CMP1	
[C0683] 1 2	 CFG: IN CFG: IN	 1000 1000	→ Selection list 1 MCTRL-NACT FCODE-17			Configuration analog inputs of CMP1	📖 7-225
C0684 1 2	 DIS: IN DIS: IN		-199.99	{0.01 %}	199.99	Analog input signals of CMP1	
C0685	Function	1	1 IN1 = IN 2 2 IN 1 > IN2 3 IN 1 < IN2 4 |IN1| = |IN2| 5 |IN1| > |IN2| 6 |IN1| < |IN2|			Function comparator CMP2 ● Compares the inputs IN1 and IN2	
C0686	Hysteresis	1.00	0.00	{0.01 %}	100.00 %	Hysteresis of CMP2	
C0687	Window	1.00	0.00	{0.01 %}	100.00 %	Window of CMP2	
[C0688] 1 2	 CFG: IN CFG: IN	 1000 1000	→ Selection list 1 FIXED 0% FIXED 0%			Configuration analog inputs of CMP2	📖 7-225
C0689 1 2	 DIS: IN DIS: IN		-199.99	{0.01 %}	199.99	Analog input signals of CMP2	
C0690	Function	1	1 IN1 = IN 2 2 IN 1 > IN2 3 IN 1 < IN2 4 |IN1| = |IN2| 5 |IN1| > |IN2| 6 |IN1| < |IN2|			Function comparator CMP3 ● Compares the inputs IN1 and IN2	
C0691	Hysteresis	1.00	0.00	{0.01 %}	100.00 %	Hysteresis of CMP3	
C0692	Window	1.00	0.00	{0.01 %}	100.00 %	Window of CMP3	
[C0693] 1 2	 CFG: IN CFG: IN	 1000 1000	→ Selection list 1 FIXED 0% FIXED 0%			Configuration analog inputs of CMP3	📖 7-225
C0694 1 2	 DIS: IN DIS: IN		-199.99	{0.01 %}	199.99	Analog input signals of CMP3	

Configuration

Code	LCD	Possible settings					IMPORTANT	
		Lenze	Choice					
CONV								📖 7-88
C0655	Numerator	1	-32767		{1}	32767	Numerator for CONV5	
C0656	Denominator	1	1		{1}	32767	Denominator for CONV5	
[C0657]	CFG: IN	1000	FIXED 0 %			→ Selection list 1	Configuration analog input of CONV5	📖 7-225
C0658	DIS: IN		-199.99		{0.01 %}	199.99	Analog input signal of CONV5	
C0940	Numerator	1	-32767		{1}	32767	Numerator for CONV1	
C0941	Denominator	1	1		{1}	32767	Denominator for CONV1	
[C0942]	CFG: IN	1000	FIXED0%			→ Selection list 1	Configuration analog input CONV1	📖 7-225
C0943	DIS: IN		-199.99		{0.01 %}	199.99	Relative analog input signal of CONV1	
C0945	Numerator	1	-32767		{1}	32767	Numerator for CONV2	
C0946	Denominator	1	1		{1}	32767	Denominator for CONV2	
[C0947]	CFG: IN	1000	FIXED0%			→ Selection list 1	Configuration analog input CONV2	📖 7-225
C0948	DIS: IN		-199.99		{0.01 %}	199.99	Relative analog input signal of CONV2	
C0950	Numerator	1	-32767		{1}	32767	Numerator for CONV3	
C0951	Denominator	1	1		{1}	32767	Denominator for CONV3	
[C0952]	CFG: IN	1000	FIXEDPHI0			→ Selection list 4	Configuration analog input CONV3	📖 7-225
C0953	DIS: IN		-32767		{1 rpm}	32767	Absolute analog input signal of CONV3	
C0955	Numerator	1	-32767		{1}	32767	Numerator for CONV4	
C0956	Denominator	1	1		{1}	32767	Denominator for CONV4	
[C0957]	CFG: IN	1000	FIXEDPHI0			→ Selection list 4	Configuration analog input CONV4	📖 7-225
C0958	DIS: IN		-32767		{1 rpm}	32767	absolute analog input signal of CONV4	
CONVPHA								📖 7-90
C1000	Division	1	0		{1}	31	Division factor	
[C1001]	CFG: IN	1000	FIXED0INC			→ Selection list 3	Configuration input of CONVPHA1	📖 7-225
C1002	DIS: IN		-2147483647		{1}	2147483647	Input signal of CONVPHA1	
CURVE								📖 7-91
C0960	Function	1	1 2 3	Function1 Function2 Function3			Characteristic CURVE1-IN	
C0961	y0	0.00	0.00		{0.01 %}	199.99	Ordinate of the pair (x=0%/y0) of CURVE1	
C0962	y1	50.00	0.00		{0.01 %}	199.99	Ordinate of the pair (x1/y1) of CURVE1	
C0963	y2	75.00	0.00		{0.01 %}	199.99	Ordinate of the pair (x2/y2) of CURVE1	
C0964	y100	100.00	0.00		{0.01 %}	199.99	Ordinate of the pair (x=100%/y100) of CURVE1	
C0965	x1	50.00	0.01		{0.01 %}	100.00	Abscissa of the pair (x1/y1) of CURVE1	
C0966	x2	75.00	0.01		{0.01 %}	99.00	Abscissa of the pair (x2/y2) of CURVE1	
[C0967]	CFG: IN	1000	FIXED0%			→ Selection list 1	Configuration characteristic CURVE1-IN	📖 7-225
C0968	DIS: IN		-199.99		{0.01 %}	199.99	Display of CURVE1-IN	
DB								📖 7-94
C0620	DB1 gain	1.00	-10.00		{0.01}	10.00	Gain dead band component DB1	
C0621	DB1 value	1.00	0.00		{0.01 %}	100.00	Dead band of DB1	
[C0622]	CFG: IN	1000	FIXED 0 %			→ Selection list 1	Configuration analog input of DB1	📖 7-225
C0623	DIS: IN		-199.99		{0.01 %}	199.99	Analog input signal of DB1	
DCTRL								📖 7-95
C0040	Ctrl enable	1	0 1	Ctrl inhibit Ctrl enable			Controller inhibit ● Write: – controls the code ● Read: – reads the controller status	
C0042	DIS: QSP		0 1	QSP inactive QSP active			Quick stop status	

Code	LCD	Possible settings		IMPORTANT	
		Lenze	Choice		
C0135	Control word		0 {1} 65535	Control word decimal when networked with automation interfaces ● Device evaluates information 16 bit, binary coded	
C0136 1	DIS: CTRLWORD		0 {1} 65535	Control word in DCTRL	
C0142	Start options	1		Start options is executed: ● after mains connection ● after message (t > 0.5s) ● after trip	
[C0870] 1 2	CFG: CINH CFG: CINH	1000 1000	→ Selection list 2 FIXED0 FIXED0	Configuration digital inputs (inhibit controller) of DCTRL	🕮 7-225
[C0871]	CFG: TRIP-SET	1000	DIGIN 4 → Selection list 2	Configuration digital input (TRIP-Set) of DCTRL	🕮 7-225
[C0876]	CFG: TRIP-RES	65	DIGIN 5 → Selection list 2	Configuration digital input (TRIP-Reset) of DCTRL	🕮 7-225
C0878 1 2 3 4	DIS: CINH1 DIS: CINH2 DIS: TRIP-SET DIS: TRIP-RES			Digital input signals of DCTRL	
C0879 1 2 3	Reset C135 Reset AIF Reset CAN		0 no reset 1 reset	Reset of control words ● C0879 = 1 performs one reset	
[C0880] 1 2	CFG: PAR*1 CFG: PAR*2	1000 1000	→ Selection list 2 FIXED 0 FIXED 0	Configuration Select parameter set of DCTRL	🕮 7-225
[C0881]	CFG:PAR-LOAD	1000	FIXED 0 → Selection list 2	Configuration Load parameter set of DCTRL	🕮 7-225
C0884 1 2 3	DIS: PAR*1 DIS: PAR*2 DIS: PAR-LOAD			Signals for parameter set selection of DCTRL	
DFIN					🕮 7-99
C0425	DFIN const	3	0 256 inc/rev 1 512 inc/rev 2 1024 inc/rev 3 2048 inc/rev 4 4096 inc/rev 5 8192 inc/rev 6 16384 inc/rev	Constant for digital frequency input in increments per revolution	
C0426	DIS: OUT		-32767 {1 rpm} 32767	Output signal of DFIN	
C0427	DFIN funktion	0	0 2-phase 1 A puls / B dir 2 Puls A or B	Type of the digital frequency signal 0 = Quadrature 1 = Pulse / Direction 2 = Pulse A / Pulse B	
DFOUT					🕮 7-108
C0030	DFOUT const	3	0 256 inc/rev 1 512 inc/rev 2 1024 inc/rev 3 2048 inc/rev 4 4096 inc/rev 5 8192 inc/rev 6 16384 inc/rev	Constant for the digital frequency output in increments per revolution	

Configuration

Code	LCD	Possible settings				IMPORTANT	
		Lenze	Choice				
[C0540]	Function					• X9 is inhibited if 0, 1, 2 or 3 was selected • The input signals get a gain	
		2	0	Analog input		analog input	
			1	PH diff input		Phase difference input	
			2	Res + int 0		Resolver simulation + zero pulse	
			3	Res + ext 0		Resolver simulation without zero pulse	
			4	OUT = DFIN		X9 is output on X10	
			5	OUT = encoder		X8 is output on X10	
[C0541]	CFG: AN-IN	0	MCTRL-NACT		→ Selection list 1	Configuration analog input of DFOUT	📖 7-225
[C0542]	CFG: DF-IN	1000	FIXEDPHI 0		→ Selection list 4	Configuration digital frequency input of DFOUT	📖 7-225
[C0544]	CFG: SYN-RDY	1000	FIXED 0		→ Selection list 2	Configuration synchronization signal for the zero pulse of DFOUT	📖 7-225
C0545	PH offset	0	0	{1 inc}	65535	Phase offset of DFOUT • 1 rev. = 65535 inc	
C0546	Min inc/rev	1000	1	{1 inc}	2147483647	• 1 rev. = 65535 inc	
C0547	DIS: AN-IN		-199.99	{0.01 %}	199.99	Relative analog input signal of DFOUT	
C0548	DIS: SYN-RDY		0		1	Digital input signal of DFOUT	
C0549	DIS: DF-IN		-32767	{1 rpm}	32767	Absolute analog input signal of DFOUT	
C1799	DFOUT f_{max}	1250	20	{1 kHz}	1250	Maximum output frequency at X10 in kHz	
DFRFG							📖 7-102
C0429	TP5 delay	0	-32767	{1 inc}	32767	Dead time compensation for the TP function of DFSET and DFRFG	
C0750	Vp denom	16	1	Gain = 1		Denominator gain of position controller of DFRFG1	
			2	Gain = 1/2			
			4	Gain = 1/4			
			8	Gain = 1/8			
			16	Gain = 1/16			
			32	Gain = 1/32			
			64	Gain = 1/64			
			128	Gain = 1/128			
			256	Gain = 1/256			
			512	Gain = 1/512			
			1024	Gain = 1/1024			
			2048	Gain = 1/2048			
			4096	Gain = 1/4096			
			8192	Gain = 1/8192			
			16384	Gain = 1/16384			
C0751	DFRFG1 Tir	1.000	0.001	{0.001 s}	999.900	Acceleration time T_{ir} of DFRFG1	
C0752	Max speed	3000	1	{1 rpm}	16000	Maximum make up speed of DFRFG1	
C0753	DFRFG1 QSP	0.000	0.000	{0.001 s}	999.900	Deceleration time T_{if} for QSP of DFRFG1	
C0754	PH error	*	10	{1 inc}	2000000000	following error of DFRFG1 → 2000000000 • 1 rev. = 65535 inc	
C0755	Syn window	100	0	{1 inc}	65535	Synchronization window of DFRFG1	
[C0758]	CFG: IN	1000	FIXEDPHI-0		→ Selection list 4	Configuration phase input of DFRFG1	📖 7-225
[C0759]	CFG: QSP	1000	FIXED0		→ Selection list 2	Configuration digital input (triggering QSP) of DFRFG1	📖 7-225
[C0760]	CFG: STOP	1000	FIXED0		→ Selection list 2	Configuration digital input (ramp generator stop) of DFRFG1	📖 7-225
[C0761]	CFG: RESET	1000	FIXED0		→ Selection list 2	Configuration digital input (reset integrators) of DFRFG1	📖 7-225
C0764 1 2 3	 DIS: QSP DIS: STOP DIS: RESET					Digital input signals of DFRFG1	

Code	LCD	Possible settings				IMPORTANT	
		Lenze	Choice				
C0765	DIS: IN		-32767	{1 rpm}	32767	Absolute analog input signal of DFRFG1	
C0766	Direction of rotation	1	1 cw/ccw 2 cw 3 cww			Direction of rotation (cw/ccw) Direction of rotation (cw) Direction of rotation (ccw)	
DFSET							📖 7-105
C0033	Gearbox denom	1	1	{1}	32767	Gearbox factor (denominator) for DFSET	
C0252	phase offset	0	-245760000	{1 inc}	245760000	Phase offset for DFSET Fixed phase offset for digital frequency configuration ● 1 rev. = 65536 inc	
C0253	Phase n-trim	*	-32767	{1 inc}	32767	Phase trimming for DFSET speed-dependent phase trimming → depending on C0005, C0025, C0490 ● Change of C0005, C0025, or C0490 resets C0253 to the default setting ● 1 rev. = 65536 inc ● C0253 is reached at 15000 rpm	
C0255	Threshold P03	327680	10	{1 inc}	1800000000	Following error limit for error P03: ● 1 rev. = 65536 inc ● Following error > C0255 releases fault "P03"	
C0429	TP5 delay	0	-32767	{1 inc}	32767	Dead time compensation for the TP function of DFSET and DFRFG	
[C0520]	CFG: IN	1000	FIXEDPHI-0		→ Selection list 4	Configuration input of DFSET	📖 7-225
[C0521]	CFG: VP-DIV	1000	FIXED 0 %		→ Selection list 1	Configuration gain factor numerator of DFSET	📖 7-225
[C0522]	CFG: RAT-DIV	1000	FIXED 0 %		→ Selection list 1	Configuration gearbox factor numerator of DFSET	📖 7-225
[C0523]	CFG: A-TRIM	1000	FIXED 0 %		→ Selection list 1	Configuration phase trimming of DFSET	📖 7-225
[C0524]	CFG: N-TRIM	1000	FIXED 0 %		→ Selection list 1	Configuration speed trimming of DFSET	📖 7-225
[C0525]	CFG: 0-PULSE	1000	FIXED 0		→ Selection list 2	Configuration one-time zero pulse is activation of DFSET	📖 7-225
[C0526]	CFG: RESET	1000	FIXED 0		→ Selection list 2	Configuration reset integrators of DFSET	📖 7-225
[C0527]	CFG: SET	1000	FIXED 0		→ Selection list 2	Configuration set integrators of DFSET	📖 7-225
C0528 1 2	 DIS: 0-pulse A DIS: Offset		-2000000000	{1 inc}	2000000000	 Phase difference between two zero pulses Offset of C0523*C0529 + C0252	
C0529	Multip offset	1	-20000	{1}	20000	Offset multiplier	
C0530	DF evaluation	1	0 with g factor 1 without g factor			Evaluation of the setpoint integrator of DFSET (with/without gearbox factor)	
C0531	Act 0 div	1	1	{1}	16384	Actual zero pulse divider of DFSET	
C0532	0-pulse/TP	1	1 0-pulse 2 Touch probe 3 0-pulse/Touch probe			Selection zero pulse of the feedback system or touch probe for DFSET	
C0533	Vp denom	1	1	{1}	32767	Gain factor denominator of DFSET	
C0534	0-pulse fct	0	0 Inactive 1 Continuous 2 Cont. switch 10 Once, fast way 11 Once, cw 12 Once, ccw 13 Once, 2*0-puls			Actual zero pulse divider of DFSET	
C0535	Set 0 div	1	1	{1}	16384	Set zero pulse divider of DFSET	

Configuration

Code	LCD	Possible settings					IMPORTANT	
		Lenze	Choice					
C0536 1 2 3	 DIS: VP-DIV DIS: RAT-DIV DIS: A-TRIM		-32767	{1}		32767	Absolute analog input signals of DFSET	
C0537	DIS: N-TRIM		-199.99	{0.01 %}		199.99	Relative analog input signal of DFSET	
C0538 1 2 3	 DIS: 0-PULSE DIS: RESET DIS: SET						Digital input signals of DFSET	
C0539	DIS: IN		-32767	{1 rpm}		32767	Input signal of DFSET	
DIGDEL								🕮 7-112
C0720	Function	2	0 1 2	On delay Off delay On/Off delay			Function digital delay component DIGDEL1	
C0721	Delay T	1.000	0.001	{0.001 s}		60.000	Delay time of DIGDEL1	
[C0723]	CFG: IN	1000	FIXED 0			→ Selection list 2	Configuration digital input of DIGDEL1	🕮 7-225
C0724	DIS: IN						Digital input signal of DIGDEL1	
C0725	Function	0	0 1 2	On delay Off delay On/Off delay			Function digital delay component DIGDEL2	
C0726	Delay T	1.0	0.001	{0.001 s}		60.000	Delay time of DIGDEL2	
[C0728]	CFG: IN	1000	FIXED0			→ Selection list 2	Configuration digital input of DIGDEL2	🕮 7-225
C0729	DIS: IN						Digital input signal of DIGDEL2	
DIGIN								🕮 7-115
C0114 1 2 3 4 5	 DIGIN pol DIGIN pol DIGIN pol DIGIN pol DIGIN pol	 1 1 0 0 0	 0 1	 HIGH active LOW active			Terminal polarity X5/E1 X5/E2 X5/E3 X5/E4 X5/E5	
C0443	DIS: DIGIN-OUT		0	{1}		255	Signals at X5/E1 to X5/E5 decimal value ● Binary interpretation indicates terminal signals	
DIGOUT								🕮 7-116
[C0117] 1 2 3 4	 CFG: DIGOUT CFG: DIGOUT CFG: DIGOUT CFG: DIGOUT	* 30101 30013 500 30012	 DCTRL-TRIP CMP1-OUT DCTRL-RDY MCTRL-MMAX			→ Selection list 2	Signal configuration DIGOUT → depending on C0005 X5/A1 X5/A2 X5/A3 X5/A4	
C0118 1 2 3 4	 DIGOUT pol DIGOUT pol DIGOUT pol DIGOUT pol	 0 0 0 0	 0 1	 High active Low active			Terminal polarity DIGOUT X5/A1 X5/A2 X5/A3 X5/A4	
C0444 1 2 3 4	 DIS: DIGOUT1 DIS: DIGOUT2 DIS: DIGOUT3 DIS: DIGOUT4		0			1	Signals at X5/A1 to X5/A4	
DT								🕮 7-117
C0650	DT1-1 gain	1.00	-320.00	{0.01}		320.00	Gain of DT1-1 component	
C0651	Delay T	1.00	0.005	{0.01 s}		5.000	Time constant of DT1-1	
[C0652]	CFG: IN	1000	FIXED 0 %			→ Selection list 1	Configuration analog input of DT1-1	🕮 7-225

Code	LCD	Possible settings				IMPORTANT	
		Lenze	Choice				
C0653	Sensibility	1	1 15-bit 2 14-bit 3 13-bit 4 12-bit 5 11-bit 6 10-bit 7 9-bit			Input sensitivity of DT1-1	
C0654	DIS: IN		-199.99	{0.01 %}	199.99	Analog input signal of DT1-1	
FCNT							📖 7-118
C1100	Function	1	1 Return 2 Hold			Function of FCNT1	
[C1101] 1 2	 CFG: LD-VAL CFG: CMP-VAL	 1000 1000	 FIXED0% FIXED0%		→ Selection list 1	Configuration analog inputs of FCNT1	📖 7-225
[C1102] 1 2 3	 CFG: CLKUP CFG: CLKDWN CFG: LOAD	 1000 1000 1000	 FIXED0 FIXED0 FIXED0		→ Selection list 2	Configuration digital inputs of FCNT1	📖 7-225
C1103 1 2	 DIS: LD-VAL DIS: CMP-VAL		-32768	{1}	32768	Analog input signals of FCNT1	
C1104 1 2 3	 DIS: CLKUP DIS: CLKDWN DIS: LOAD					Digital input signals of FCNT1	
FDO							📖 7-120
[C0116] 1 ... 32	 CFG: FDO-0 ... CFG: FDO-31	1000	FIXED 0		→ Selection list 2	CFG: FDO (Free digital outputs) ● Signal assignment of the free digital outputs. Used for LECOM or system bus.	
C0151	DIS: FDO (DW)		output signals configured with C0116			Hexadecimal signal assignment of the free digital outputs. ● binary interpretation indicates the bit states	
FEVAN							📖 7-122
C1090	Output signal		-2147483648	{1}	2147483647	Output signal of FEVAN1 ● display only	
C1091	Code	1309	2	{1}	2000	Code for FEVAN1	
C1092	Subcode	0	0	{1}	255	Subcode for FEVAN1	
C1093	Numerator	1.0000	0.0001	{0.0001}	100000.0000	Numerator for FEVAN1	
C1094	Denomiator	0.0001	0.0001	{1}	100000.0000	Denominator for FEVAN1	
C1095	Offset	0	0	{1}	1000000000	Offset for FEVAN1	
[C1096]	CFG: IN	19552	FIXED0%		→ Selection list 1	Configuration analog input of FEVAN1	📖 7-225
[C1097] 1 2 3	 CFG: LOAD CFG: BUSY-IN CFG: FAIL-IN	 19401 1000 1000	FIXED0		→ Selection list 2	Configuration digital inputs of FEVAN1	📖 7-225
C1098	DIS: IN		-32768	{1}	32767	Analog input signal of FEVAN1	
C1099 1 2 3	 DIS: LOAD DIS: BUSY-IN DIS: FAIL-IN					Digital input signal of FEVAN1	
C1500	Output signal		-2147483648	{1}	2147483647	Output signal of FEVAN2 ● display only	
C1501	Code	141	2	{1}	2000	FEVAN2 code	
C1502	Subcode	0	0	{1}	255	FEVAN2 subcode	
C1503	Numerator	1	0	{1}	100000	FEVAN2 numerator	

Configuration

Code	LCD	Possible settings				IMPORTANT	
		Lenze	Choice				
C1504	Denominator	0.0001	0.0001	{0.0001}	100000	FEVAN2 denominator	
C1505	Offset	0	0	{1}	1000000000	FEVAN2 offset	
[C1506]	CFG: IN	6230	50	{1}	25104 → Selection list 1	CFG: FEVAN2-IN	📖 7-225
[C1507] 1 2 3	 CFG: LOAD CFG: BUSY-IN CFG: FAIL-IN	 19450 1000 1000	51	{1}	25132 → Selection list 2	CFG: FEVAN2-LOAD	📖 7-225
C1508	DIS: IN		-32768	{1}	32768	DIS: FEVAN2-IN	
C1509 1 2 3	 DIS: LOAD DIS: BUSY-IN DIS: FAIL-IN		0		1	DIS: FEVAN2-LOAD	
C1510	Output signal		-2147483647	{1}	2147483647	Output signal of FEVAN3 ● display only	
C1511	Code	141	2	{1}	2000	FEVAN3 Code	
C1512	Subcode	0	0	{1}	255	FEVAN3 Subcode	
C1513	Numerator	1	0	{1}	100000	FEVAN3 numerator	
C1514	Denominator	0.0001	0.0001	{0.0001}	100000	FEVAN3 denominator	
C1515	Offset	0	0	{1}	1000000000	FEVAN3 Offset	
[C1516]	CFG: IN	1000	50	{1}	25104 → Selection list 1	CFG: FEVAN3-IN	📖 7-225
[C1517] 1 2 3	 CFG: LOAD CFG: BUSY-IN CFG: FAIL-IN	 1000 1000 1000	51	{1}	25132 → Selection list 2	CFG: FEVAN3-LOAD	📖 7-225
C1518	DIS: IN		-32768	{1}	32768	DIS: FEVAN3-IN	
C1519 1 2 3	 DIS: LOAD DIS: BUSY-IN DIS: FAIL-IN		0		1	DIS: FEVAN3-LOAD	
FLIP							📖 7-127
[C0770]	CFG: D	1000	FIXED0		→ Selection list 2	Configuration data input of FLIP1	📖 7-225
[C0771]	CFG: CLK	1000	FIXED0		→ Selection list 2	Configuration clock input of FLIP1	📖 7-225
[C0772]	CFG: CLR	1000	FIXED0		→ Selection list 2	Configuration reset input of FLIP1	📖 7-225
C0773 1 2 3	 DIS: D DIS: CLK DIS: CLR					Digital input signals of FLIP1	
[C0775]	CFG: D	1000	FIXED0		→ Selection list 2	Configuration data input of FLIP2	📖 7-225
[C0776]	CFG: CLK	1000	FIXED0		→ Selection list 2	Configuration clock input of FLIP2	📖 7-225
[C0777]	CFG: CLR	1000	FIXED0		→ Selection list 2	Configuration reset input of FLIP2	📖 7-225
C0778 1 2 3	 DIS: D DIS: CLK DIS: CLR					Digital input signals of FLIP2	
LIM							📖 7-129
C0630	Max limit	100.00	-199.99	{0.01 %}	199.99	Upper limit of limiter LIM1	
C0631	Min limit	-100.0	-199.99	{0.01 %}	199.99	Lower limit of limiter LIM1	
[C0632]	CFG: IN	1000	FIXED 0 %		→ Selection list 1	Configuration analog input of LIM1	📖 7-225
C0633	DIS: IN		-199.99	{0.01 %}	199.99	Analog input signal of LIM1	

Code	LCD	Possible settings				IMPORTANT	
		Lenze	Choice				
MCTRL							📖 7-130
[C0006]	Op mode	*				Operating mode of the motor control → depending on C0086 ● Change of C0086 resets value to the assigned default setting ● Change of C0006 sets C0086 = 0!	
			1	SSC norm		sensorless control for motors in star connection	
			2	Servo async Y		Servo control asynchronous motors in star connection	
			3	Servo PM-SM Y		Servo control synchronous motors in star connection	
			11	SSC norm		sensorless control for motors in delta connection	
			22	Servo async		Servo control asynchronous motors in delta connection	
C0011	Nmax	3000	500	{1 rpm}	16000	Maximum speed Reference value for the absolute and relative setpoint selection for the acceleration and deceleration times. ● For parameterization via interface: Large changes in one step should only be made when the controller is inhibited.	
C0018	fchop	1				Chopping frequency	
			0	16/8 kHz sin		Optimum noise reduction with automatic change-over to 8 kHz	
			1	8 kHz sin		Operation with optimum power	
			2	16 kHz sin		Operation with optimum noise reduction	
C0022	Imax current	*3.75	0	{0.01 A}	1.50 I_r	I_{max}limit → depending on C0086 ● Change of C0086 resets value to the assigned factory setting (1.5*Imotor)	
[C0025]	Feedback type	10				Selection of the feedback system ● Input of the encoder specified on the nameplate of the Lenze motor: ● C0025 automatically changes C0420, C0490, C0495	
			0	COMMON		C0420, C0490 or C0495 was changed subsequently	
			10	RSx (Resolver)		The resolver is designated with RSxxxxxxxx.	
			110 111 112 113	IT-512-5V IT-1024-5V IT-2048-5V IT-4096-5V		Incremental encoder with TTL level	
			210 211 212 213	IS-512-5V IS-1024-5V IS-2048-5V IS-4096-5V		Sine-cosine encoder	
			310	AS-512-8V		Single turn Sine-cosine encoder with RS485 interface, Stegmann	
			410	AM-512-8V		Multi turn Sine-cosine encoder with RS485 interface, Stegmann	
C0050	MCTRL-NSET2		-100.00	{0.01 %}	100.00	n_{set} at the speed controller input ● display only	
C0051	MCTRL-NACT		-30000	{1 rpm}	30000	Actual speed ● display only	

Configuration

Code	LCD	Possible settings				IMPORTANT	
		Lenze	Choice				
C0052	MCTRL-Umot		0	{1 V}	800	Actual motor voltage ● display only	
C0053	UG-VOLTAGE		0	{1 V}	900	DC bus voltage ● display only	
C0054	IMot		0.0	{0.1 A}	500.0	Actual motor current ● display only	
C0056	MCTRL-MSET2		-100.00	{0.01 %}	100.00	Torque setpoint (output of the speed controller) ● display only	
C0057	Max Torque		0.0	{0.1 Nm}	500.0	Maximum possible torque of the drive configuration ● display only ● depending on C0022, C0086	
C0058	Rotor diff		-180.0	{0.1 °}	179.9	Zero phase of the rotor for synchronous motors (C0095) ● display only	
C0070	Vp speed-CTRL	*	0.0	{0.5}	255.0	V_{pn} speed controller → depending on C0086 ● Change of C0086 resets value to the assigned default setting	
C0071	Tn speed-CTRL	*	1.0 >512 ms switched off	{0.5 ms}	600.0	T_{nn} speed controller → depending on C0086 ● Change of C0086 resets value to the assigned default setting	
C0072	Td speed-CTRL	0.0	0.0	{0.1 ms}	32.0	T_{dn} speed controller	
C0075	Vp curr-CTRL	*	0.00	{0.01}	15.99	V_{pi} current controller → depending on C0086 ● Change of C0086 resets value to the assigned default setting	
C0076	Tn curr-CTRL	*	0.5 2000 ms switched off	{0.1 ms}	1999.0	T_{ni} current controller → depending on C0086 ● Change of C0086 resets value to the assigned default setting	
C0077	Vp field-CTRL	0.25	0.00	{0.01}	15.99	V_{pF} field controller	
C0078	Tn field-CTRL	15.0	1.0 8000 ms switched off	{0.5 ms}	7999.0	T_{nF} field controller	
[C0081]	Mot power	*	0.01	{0.01 kW}	500.00	Rated motor power acc. to nameplate → depending on C0086 ● Change of C0086 resets value to the assigned default setting ● Change of C0081 sets C0086 = 0	
[C0084]	Mot Rs	*	0.00	{0.01 Ω}	100.00	Stator resistance of the motor required for C0006 = 1 → depending on C0086 ● Change of C0086 resets value to the assigned default setting ● Change of C0084 sets C0086 = 0	
[C0085]	Mot Ls	*	0.00	{0.01}	200.00	Stray inductance of the motor required for C0006 = 1 → depending on C0086 ● Change of C0086 resets value to the assigned default setting ● Change of C0085 sets C0086 = 0	
[C0086]	Mot type	*				Selection motor type → depending on the controller ● Change of C0086 resets C0006, C0022, C0070, C0071, C0081, C0084, C0085, C0087, C0088, C0089, C0090, C0091 to the assigned default setting	
			0	COMMON		no Lenze motor	

Code	LCD	Possible settings			IMPORTANT
		Lenze	Choice		
[C0086]	Mot type (Continued)		New generation Lenze asynchronous servo motors		• with integrated temperature monitoring via resolver or encoder cable. • The temperature monitoring via resolver or encoder cable is activated automatically, i.e.: C0583 = 0 C0584 = 2 C0594 = 0
			10	DSKA56-140	MDSKAXX056-22, f_r: 140Hz
			11	DFKA71-120	MDFKAXX071-22, f_r: 120Hz
			12	DSKA71-140	MDSKAXX071-22, f_r: 140Hz
			13	DFKA80-60	MDFKAXX080-22, f_r: 60Hz
			14	DSKA80-70	MDSKAXX080-22, f_r: 70Hz
			15	DFKA80-120	MDFKAXX080-22, f_r: 120Hz
			16	DSKA80-140	MDSKAXX080-22, f_r: 140Hz
			17	DFKA90-60	MDFKAXX090-22, f_r: 60Hz
			18	DSKA90-80	MDSKAXX090-22, f_r: 80Hz
			19	DFKA90-120	MDFKAXX090-22, f_r: 120Hz
			20	DSKA90-140	MDSKAXX090-22, f_r: 140Hz
			21	DFKA100-60	MDFKAXX100-22, f_r: 60Hz
			22	DSKA100-80	MDSKAXX100-22, f_r: 80Hz
			23	DFKA100-120	MDFKAXX100-22, f_r: 120Hz
			24	DSKA100-140	MDSKAXX100-22, f_r: 140Hz
			25	DFKA112-60	MDFKAXX112-22, f_r: 60Hz
			26	DSKA112-85	MDSKAXX112-22, f_r: 85Hz
			27	DFKA112-120	MDFKAXX112-22, f_r: 120Hz
			28	DSKA112-140	MDSKAXX112-22, f_r: 140Hz
			30	DFQA100-50	MDFQAXX100-50, f_r: 50Hz
			31	DFQA100-100	MDFQAXX100-100, f_r:100Hz
			32	DFQA112-28	MDFQAXX112-28, f_r: 28Hz
			33	DFQA112-58	MDFQAXX112-58, f_r: 58Hz
			34	DFQA132-20	MDFQAXX132-20, f_r: 20Hz
			35	DFQA132-42	MDFQAXX132-42, f_r: 42Hz
			40	DFQA112-50	MDFQAXX112-50, f_r: 50Hz
			41	DFQA112-100	MDFQAXX112-100, f_r:100Hz
			42	DFQA132-36	MDFQAXX132-36, f_r: 36Hz
			43	DFQA132-76	MDFQAXX132-76, f_r: 76Hz
			Lenze asynchronous servo motors		• without integrated temperature monitoring • The temperature monitoring via resolver or encoder cable is deactivated automatically, i.e.: C0583 = 3 C0584 = 3 C0594 = 3
		*	50	DSVA56-140	DSVAXX056-22, f_r: 140Hz
			51	DFVA71-120	DFVAXX071-22, f_r: 120Hz
			52	DSVA71-140	DSVAXX071-22, f_r: 140Hz
			53	DFVA80-60	DFVAXX080-22, f_r: 60Hz
			54	DSVA80-70	DSVAXX080-22, f_r: 70Hz
			55	DFVA80-120	DFVAXX080-22, f_r: 120Hz
			56	DSVA80-140	DSVAXX080-22, f_r: 140Hz
			57	DFVA90-60	DFVAXX090-22, f_r: 60Hz
			58	DSVA90-80	DSVAXX090-22, f_r: 80Hz
			59	DFVA90-120	DFVAXX090-22, f_r: 120Hz
			60	DSVA90-140	DSVAXX090-22, f_r: 140Hz
			61	DFVA100-60	DFVAXX100-22, f_r: 60Hz
			62	DSVA100-80	DSVAXX100-22, f_r: 80Hz
			63	DFVA100-120	DFVAXX100-22, f_r: 120Hz
			64	DSVA100-140	DSVAXX100-22, f_r: 140Hz
			65	DFVA112-60	DFVAXX112-22, f_r: 60Hz
			66	DSVA112-85	DSVAXX112-22, f_r: 85Hz
			67	DFVA112-120	DFVAXX112-22, f_r: 120Hz
			68	DSVA112-140	DSVAXX112-22, f_r: 140Hz

Configuration

Code	LCD	Possible settings		IMPORTANT
		Lenze	Choice	
[C0086]	Mot type (Continued)		New generation Lenze synchronous servo motors	• with integrated temperature monitoring via resolver or encoder cable. • The temperature monitoring via resolver or encoder cable is activated automatically, i.e.: C0583 = 0 C0584 = 2 C0594 = 0
			108 DSKS36-13-200	MDSKSXX036-13, f_r:200Hz
			109 DSKS36-23-200	MDSKSXX036-23, f_r:200Hz
			110 DSKS56-23-150	MDSKSXX056-23, f_r: 150Hz
			111 DSKS56-33-150	MDSKSXX056-33, f_r: 150Hz
			112 DSKS71-13-150	MDSKSXX071-13, f_r: 150Hz
			113 DFKS71-13-150	MDFKSXX071-13, f_r: 150Hz
			114 DSKS71-23-150	MDSKSXX071-23, f_r: 150Hz
			115 DFKS71-23-150	MDFKSXX071-23, f_r: 150Hz
			116 DSKS71-33-150	MDSKSXX071-33, f_r: 150Hz
			117 DFKS71-33-150	MDFKSXX071-33, f_r: 150Hz
			160 DSKS56-23-190	MDSKSXX56-23-190,f_r:190Hz
			161 DSKS56-33-200	MDSKSXX56-33-200,f_r:200Hz
			162 DFKS71-03-170	MDFKSXX71-03-170,f_r:170Hz
			163 DSKS71-03-165	MDSKSXX71-03-165,f_r:165Hz
			164 DSKS71-13-185	MDSKSXX71-13-185,f_r:185Hz
			165 DFKS71-13-180	MDFKSXX71-13-180,f_r:180Hz
			166 DSKS71-33-180	MDSKSXX71-33-180,f_r:180Hz
			167 DFKS71-33-175	MDFKSXX71-33-175,f_r:175Hz
			Lenze inverter motor in star connection	• The temperature monitoring via resolver or encoder cable is deactivated automatically, i.e.: C0583 = 3 C0584 = 3 C0594 = 3
			210 DXRA071-12-50	DXRAXX071-12, f_d: 50Hz
			211 DXRA071-22-50	DXRAXX071-22, f_d: 50Hz
			212 DXRA080-12-50	DXRAXX080-12, f_d: 50Hz
			214 DXRA090-12-50	DXRAXX090-12, f_d: 50Hz
			215 DXRA090-32-50	DXRAXX090-32, f_d: 50Hz
			216 DXRA100-22-50	DXRAXX100-22, f_d: 50Hz
			217 DXRA100-32-50	DXRAXX100-32, f_d: 50Hz
			218 DXRA112-12-50	DXRAXX112-12, f_d: 50Hz
			219 DXRA132-12-50	DXRAXX132-12, f_d: 50Hz
			220 DXRA132-22-50	DXRAXX132-22, f_d: 50Hz
			221 DXRA160-12-50	DXRAXX160-12, f_d: 50Hz
			222 DXRA160-22-50	DXRAXX160-22, f_d: 50Hz
			223 DXRA180-12-50	DXRAXX180-12, f_d: 50Hz
			224 DXRA180-22-50	DXRAXX180-22, f_d: 50Hz
			225 30kW-ASM-50	
			226 37kW-ASM-50	
			227 45kW-ASM-50	
			228 55kW-ASM-50	
			229 75kW-ASM-50	

Code	LCD	Possible settings				IMPORTANT
		Lenze	Choice			
[C0086]	Mot type (Continued)		Lenze inverter motor in delta connection			• The temperature monitoring via resolver or encoder cable is deactivated automatically, i.e.: C0583 = 3 C0584 = 3 C0594 = 3
			250 DXRA071-12-87			DXRAXX071-12, f_d: 87Hz
			251 DXRA071-22-87			DXRAXX071-22, f_d: 87Hz
			252 DXRA080-12-87			DXRAXX080-12, f_d: 87Hz
			254 DXRA090-12-87			DXRAXX090-12, f_d: 87Hz
			255 DXRA090-32-87			DXRAXX090-32, f_d: 87Hz
			256 DXRA100-22-87			DXRAXX100-22, f_d: 87Hz
			257 DXRA100-32-87			DXRAXX100-32, f_d: 87Hz
			258 DXRA112-12-87			DXRAXX112-12, f_d: 87Hz
			259 DXRA132-12-87			DXRAXX132-12, f_d: 87Hz
			260 DXRA132-22-87			DXRAXX132-22, f_d: 87Hz
			261 DXRA160-12-87			DXRAXX160-12, f_d: 87Hz
			262 DXRA160-22-87			DXRAXX160-22, f_d: 87Hz
			263 DXRA180-12-87			DXRAXX180-12, f_d: 87Hz
			264 DXRA180-22-87			DXRAXX180-22, f_d: 87Hz
			265 30kW-ASM-87			
			266 37kW-ASM-87			
			267 45kW-ASM-87			
			268 55kW-ASM-87			
			269 75kW-ASM-87			
[C0087]	Mot speed	*	300	{1 rpm}	16000	Rated motor speed → depending on C0086 • Change of C0086 resets value to the assigned default setting • Change of C0087 sets C0086 = 0
[C0088]	Mot current	*	0.5	{0.1 A}	500.0	Rated motor current → depending on C0086 • Change of C0086 resets value to the assigned default setting • Change of C0088 sets C0086 = 0
[C0089]	Mot frequency	*	10	{1 Hz}	1000	Rated motor frequency → depending on C0086 • Change of C0086 resets value to the assigned default setting • Change of C0089 sets C0086 = 0
[C0090]	Mot voltage	*	50	{1 V}	500	Rated motor voltage → depending on C0086 • Change of C0086 resets value to the assigned default setting • Change of C0090 sets C0086 = 0
[C0091]	Mot cos phi	*	0.50	{0.01}	1.00	Motor cos φ → depending on C0086 • Change of C0086 resets value to the assigned default setting • Change of C0091 sets C0086 = 0
[C0095]	Rotor pos adj	0	0 inactive 1 active			Rotor position adjustment of a synchronous motor • C0058 displays the zero angle of the rotor • C0095 = 1 starts position adjustment
C0105	QSP Tif	0.000	0.000	{0.001 s}	999.900	Deceleration time for quick stop (QSP) • Related to speed change 0…$n_{max.}$
C0254	Vp angle-CTRL	0.2000	0.0000	{0.0001}	3.9999	V_p phase controller in MCTRL
C0291	SSC override	0	0	{1 rpm}	16000	Override frequency for the transition from sensorless control to controlled operation

Configuration

Code	LCD	Possible settings				IMPORTANT	
		Lenze	Choice				
C0292	SSC Im set	0	0	{0.01 A}	500.00	Motor current setpoint ● Set approx. 1.0 to 1.1 rated motor current for sensorless control.	
C0293	SSC dynamic	0	0.00	{0.01 %}	199.00	Dynamic constant ● dynamic motor current boost	
C0294	Vp frq	*	0.0	{0.1}	99.9	Proportional gain frequency controller → depending on C0086	
C0295	Tn frq	*	2	{1}	20000	Adjustment time frequency controller → depending on C0086	
C0296	Dynamic const	100	0	{1}	32767	Dynamic constant	
[C0416]	Resolver adj	0	0	{1}	99999999	Correction of the resolver error For Lenze motors: ● Read resolver error from the nameplate	
[C0420]	Encoder const	512	256	{1 inc/rev}	8192	Encoder constant for encoder input X8 in increments per revolution	
[C0421]	Encoder volt	5.00	5.00	{0.1V}	8.00	Set supply voltage for the encoder used ● CAUTION: incorrect input may destroy the encoder	
[C0490]	Feedback pos	0	0 Resolver 1 Encoder TTL 2 Encoder sin 3 Absolut ST 4 Absolut MT			Feedback system for the speed controller ● C0490 = 0, 1, 2 can be mixed with C0495 = 0, 1, 2 ● C0490 = 3, 4 also sets C0495 to the same value Resolver at X7 Encoder TTL at X8 sin/cos encoder at X8 Absolute value encoder ST at X8 Absolute value encoder MT at X8	
[C0495]	Feedback n	0	0 Resolver 1 Encoder TTL 2 Encoder sin 3 Absolut ST 4 Absolut MT			Feedback system for the speed controller ● C0495 = 0, 1, 2 can be mixed with C0490 = 0, 1, 2 ● C0495 = 3, 4 also sets C0490 to the same value Resolver at X7 Encoder TTL at X8 sin/cos encoder at X8 Absolute value encoder ST at X8 Absolute value encoder MT at X8	
C0497	Nact-filter	2.0	0.0 0 ms switched off	{0.1 ms}	50.0	Time constant actual speed	
C0577	Vp fld weak	3.0	0.00	{0.01 ms}	15.99	Field weakening controller gain V_p	
C0578	Tn fld weak	50	2.0 8000 ms switched off	{0.5 ms}	8192.0	Field weakening controller adjustment time Tn	
[C0890]	CFG: N-SET	13200	NSET-NOUT		→ Selection list 1	Configuration speed setpoint input motor control MCTRL	🕮 7-225
[C0891]	CFG: M-ADD	1000	FIXED0%		→ Selection list 1	Configuration torque setpoint input of MCTRL	🕮 7-225
[C0892]	CFG: LO-M-LIM	5700	ANEG1-OUT		→ Selection list 1	Configuration lower torque limit of MCTRL	🕮 7-225
[C0893]	CFG: HI-M-LIM	19523	FCODE-472/3		→ Selection list 1	Configuration upper torque limit of MCTRL	🕮 7-225
[C0894]	CFG: PHI-SET	13201	FIXED0INC		→ Selection list 3	Configuration rotor position setpoint of MCTRL	🕮 7-225
[C0895]	CFG: PHI-LIM	19526	FIXED100%		→ Selection list 1	Configuration phase controller limit of MCTRL	🕮 7-225
[C0896]	CFG: N2-LIM	1000	FIXED0%		→ Selection list 1	Configuration second speed limitation of MCTRL	🕮 7-225
[C0897]	CFG: PHI-ON	1001	FIXED0		→ Selection list 2	Configuration switch-on signal phase controller of MCTRL	🕮 7-225
[C0898]	CFG: FLD-WEAK	1006	FIXED100%		→ Selection list 1	Configuration signal for field weakening of MCTRL	🕮 7-225

Code	LCD	Possible settings				IMPORTANT	
		Lenze	Choice				
[C0899]	CFG: N/M-SWT	1000	FIXED0		→ Selection list 2	Configuration changeover between speed control and torque control MCTRL	🕮 7-225
[C0900]	CFG: QSP	51	R/L/Q-QSP		→ Selection list 2	Configuration control signal to activate QSP of MCTRL	🕮 7-225
[C0901]	CFG: I-SET	1000	FIXED0%		→ Selection list 1	Configuration Load I-component of the MCTRL speed controller	🕮 7-225
[C0902]	CFG: I-LOAD	1000	FIXED0		→ Selection list 2	Configuration release signal to load the I-component of the MCTRL speed controller	🕮 7-225
C0906 1 2 3 4 5 6 7 8	 DIS: N-SET DIS: M-ADD DIS: LO-M-LIM DIS: HI-M-LIM DIS: PHI-LIM DIS: N2-LIM DIS: FLD-WEAK DIS: I-SET		-199.99	{0.01 %}	199.99	Analog input signals of MCTRL	
C0907 1 2 3 4	 DIS: PHI-ON DIS: N/M-SWT DIS: QSP DIS: I-LOAD					Digital input signals of MCTRL	
C0908	DIS: PHI-SET		-2147483647	{1 inc}	2147483647	Set phase signal of MCTRL ● 1 rev. = 65536 inc	
C0909	speed limit	1	1 2 3	+/- 175 % 0 .. +175 % -175 .. 0 %		Speed limitation for the MCTRL speed setpoint	
MPOT							🕮 7-137
C0260	MPOT1 high	100.00	-199.99	{0.01 %}	199.99	Upper limit of motor potentiometer ● Mandatory: C0260 > C0261	
C0261	MPOT1 low	-100.0	-199.99	{0.01 %}	199.99	Lower limit of motor potentiometer ● Mandatory: C0261 < C0260	
C0262	MPOT1 Tir	10.0	0.1	{0.1 s}	6000.0	Motor pot acceleration time T_{ir} ● Related to change 0…100 %	
C0263	MPOT1 Tif	10.0	0.1	{0.1 s}	6000.0	Motor pot deceleration time T_{if} ● Related to change 0…100 %	
C0264	MPOT1 on/off	0	 0 1 2 3 4 5	 No function Down to 0% Down to C261 Jump 0% Jump to C261 Up to C260		Deactivation function of motor pot ● Function which is executed when motor pot is deactivated via the input MPOT1-INACTIVE. no change Deceleration with T_{if} to 0% Deceleration with T_{if} to C0261 Inhibit with T_{if} = 0 to 0% Inhibit with T_{if} = 0 to C0261 Acceleration with T_{ir} to C0260	
C0265	MPOT1 init	0	 0 1 2	 Power off C261 0%		Initialization function of motor pot ● Value which is accepted during mains switching and activated motor pot. Value during mains failure lower limit of C0261 0 %	
[C0267] 1 2	 CFG: UP CFG: DOWN	 1000 1000	 FIXED 0 FIXED 0		→ Selection list 2	Configuration of the digital inputs of motor pot MPOT1 Digital input acceleration Digital input deceleration	
[C0268]	CFG: INACT	1000	FIXED 0		→ Selection list 2	Configuration of the motor pot input MPOT1-INACTIVE	

Configuration

Code	LCD	Possible settings			IMPORTANT	
		Lenze	Choice			
C0269 1 2 3	 DIS: UP DIS: DOWN DIS: INACTIVE				Input signals motor potentiometer	
NOT						📖 7-139
[C0840]	CFG: IN	1000	FIXED0	→ Selection list 2	Configuration digital input of the digital NOT element NOT1	📖 7-225
C0841	DIS: IN				Digital input signal of NOT1	
[C0842]	CFG: IN	1000	FIXED0	→ Selection list 2	Configuration digital input of the digital NOT element NOT2	📖 7-225
C0843	DIS: IN				Digital input signal of NOT2	
[C0844]	CFG: IN	1000	FIXED0	→ Selection list 2	Configuration digital input of the digital NOT element NOT3	📖 7-225
C0845	DIS: IN				Digital input signal of NOT3	
[C0846]	CFG: IN	1000	FIXED0	→ Selection list 2	Configuration digital input of the digital NOT element NOT4	📖 7-225
C0847	DIS: IN				Digital input signal of NOT4	
[C0848]	CFG: IN	1000	FIXED0	→ Selection list 2	Configuration digital input of the digital NOT element NOT5	📖 7-225
C0849	DIS: IN				Digital input signal of NOT5	
NSET						📖 7-141
C0011	Nmax	3000	500 {1 rpm}	16000	Maximum speed Reference value for the absolute and relative setpoint selection for the acceleration and deceleration times. ● For parameterization via interface: Large changes in one step should only be made when the controller is inhibited.	
C0012	Tir (acc)	0.000	0.000 {0,001 s}	999.900	Acceleration time T_{ir} for the main setpoint of NSET ● Related to speed change 0…$n_{max.}$	
C0013	Tif (dec)	0.000	0.000 {0.001 s}	999.900	Deceleration time T_{if} for the main setpoint of NSET ● Related to speed change 0…$n_{max.}$	
C0039 1 2 3 4 5 ... 14 15	 JOG set-value JOG set-value JOG set-value JOG set-value JOG set-value ... JOG set-value JOG set-value	 100.0 75.00 50.00 25.00 0.00 ... 0.00 0.00	-199.99 {0.01}	199.99	Fixed speeds (JOG setpoints) can be selected for NSET using digital inputs.	
C0045	DIS: act JOG		0 Nset active 1 JOG 1 2 JOG 2 ... 15 JOG 15		Active JOG setpoint	
C0046	DIS: N		-199.99 {0.01 %}	199.99	Main setpoint	
C0049	DIS: NADD		-199.99 {0.01 %}	199.99	Additional setpoint	
C0101 1 2 ... 15	 add Tir add Tir ... add Tir	 0.000 0.000 ... 0.000	0.000 {0.001 s}	999.900	Additional acceleration times T_{ir} for the main setpoint of NSET ● Related to speed change 0…$n_{max.}$	

Code	LCD	Possible settings		IMPORTANT	
		Lenze	Choice		
C0103 1 2 ... 15	 add Tif add Tif ... add Tif	 0.000 0.000 ... 0.000	0.000 {0.001 s} 999.900	Additional deceleration times T_{if} for the main setpoint of NSET ● Related to speed change 0…$n_{max.}$	
C0130	DIS: act Ti		 0 C12/C13 1 Ti 1 2 Ti 2 ... 14 Ti 14 15 Ti 15	active $T_i$times of NSET C0012/C0013 active T_{ir1}/T_{if1} active T_{ir2}/T_{if2} active ... T_{ir14}/T_{if14} active T_{ir15}/T_{if15} active	
C0134	RFG charac	0	 0 linear 1 S-shaped	Ramp characteristic for main setpoint linear S-shaped	
C0182	Ti S-shaped	20.00	0.01 s {0.01 s} 50.00 s	T_i time of the S-shaped ramp generator for NSET Determines the S-shape ● small values ⇒small S rounding ● large values ⇒large S rounding	
C0190	NSET arit	0	0 OUT = C46 1 C46 + C49 2 C46 - C49 3 C46 * C49 4 C46 / C49 5 C46/(100 - C49)	Arithmetics block in the function block NSET ● Connects main setpoint C0046 and additional setpoint C0049	
C0220	NSET Tir add	0.000	0.000 {0.001 s} 999.900	Acceleration time T_{ir} of the additional setpoint for NSET ● Related to speed change 0…$n_{max.}$	
C0221	NSET Tif add	0.000	0.000 {0.001 s} 999.900	Deceleration time T_{if} of the additional setpoint for NSET ● Related to speed change 0…$n_{max.}$	
C0241	NSET RFG I = O	1.00	0.00 {0.01 %} 100.00 100 % = n_{max}	Threshold ramp generator for main setpoint Input = output	
[C0780]	CFG: N	1000	AIN1-OUT → Selection list 1	Configuration main setpoint input of NSET	🕮 7-225
[C0781]	CFG: N-INV	1000	R/L/Q-R/L → Selection list 2	Configuration main setpoint inversion of NSET	🕮 7-225
[C0782]	CFG: NADD	1000	ASW1-OUT → Selection list 1	Configuration additional setpoint input of NSET	🕮 7-225
[C0783]	CFG: NADD-INV	1000	FIXED0 → Selection list 2	Configuration additional setpoint inversion of NSET	🕮 7-225
[C0784]	CFG: CINH-VAL	1000	MCTRL-NACT → Selection list 1	Configuration output signal with controller inhibit of NSET	🕮 7-225
[C0785]	CFG: SET	1000	MCTRL-NSET2 → Selection list 1	Configuration ramp generator of NSET	🕮 7-225
[C0786]	CFG: LOAD	1000	MCTRL-QSP-OUT → Selection list 2	Configuration digital input (load ramp generator) of NSET	🕮 7-225
[C0787] 1 2 3 4	 CFG: JOG*1 CFG: JOG*2 CFG: JOG*4 CFG: JOG*8	 1000 1000 1000 1000	→ Selection list 2 DIGIN3 FIXED0 FIXED0 FIXED0	Configuration JOG selection and JOG activation of NSET ● Binary interpretation	🕮 7-225
[C0788] 1 2 3 4	 CFG: TI*1 CFG: TI*2 CFG: TI*4 CFG: TI*8	 1000 1000 1000 1000	→ Selection list 2 FIXED0 FIXED0 FIXED0 FIXED0	Configuration Ti selection and Ti activation of NSET ● Binary interpretation ● Tir and Tif pairs are identical	🕮 7-225
[C0789]	CFG: RFG-0	1000	FIXED0 → Selection list 2	Configuration digital input (ramp generator 0) of NSET	🕮 7-225

Configuration

Code	LCD	Possible settings				IMPORTANT	
		Lenze	Choice				
[C0790]	CFG: RFG-STOP	1000	FIXED0		→ Selection list 2	Configuration digital input (ramp generator stop) of NSET	📖 7-225
C0798 1 2	 DIS: CINH-VAL DIS: SET		-199.99	{0.01 %}	199.99	Analog input signals of NSET	
C0799 1 2 3 4 5 6 7 8 9 10 11 12 13	 DIS: N-INV DIS: NADD-INV DIS: LOAD DIS: JOG*1 DIS: JOG*2 DIS: JOG*4 DIS: JOG*8 DIS: TI*1 DIS: TI*2 DIS: TI*4 DIS: TI*8 DIS RFG-0 DIS: RFG-STOP					Digital input signals of NSET	
OR							📖 7-146
[C0830] 1 2 3	 CFG: IN CFG: IN CFG: IN	 1000 1000 1000	 FIXED0 FIXED0 FIXED0		→ Selection list 2	Configuration digital inputs of the OR element OR1	📖 7-225
C0831 1 2 3	 DIS: IN DIS: IN DIS: IN					Digital input signals of OR1	
[C0832] 1 2 3	 CFG: IN CFG: IN CFG: IN	 1000 1000 1000	 FIXED0 FIXED0 FIXED0		→ Selection list 2	Configuration digital inputs of the OR element OR2	📖 7-225
C0833 1 2 3	 DIS: IN DIS: IN DIS: IN					Digital input signals of OR2	
[C0834] 1 2 3	 CFG: IN CFG: IN CFG: IN	 1000 1000 1000	 FIXED0 FIXED0 FIXED0		→ Selection list 2	Configuration digital inputs of the OR element OR3	📖 7-225
C0835 1 2 3	 DIS: IN DIS: IN DIS: IN					Digital input signals of OR3	
[C0836] 1 2 3	 CFG: IN CFG: IN CFG: IN	 1000 1000 1000	 FIXED0 FIXED0 FIXED0		→ Selection list 2	Configuration digital inputs of the OR element OR4	📖 7-225
C0837 1 2 3	 DIS: IN DIS: IN DIS: IN					Digital input signals of OR4	
[C0838] 1 2 3	 CFG: IN CFG: IN CFG: IN	 1000 1000 1000	 FIXED0 FIXED0 FIXED0		→ Selection list 2	Configuration digital inputs of the OR element OR5	📖 7-225
C0839 1 2 3	 DIS: IN DIS: IN DIS: IN					Digital input signals of OR5	

Code	LCD	Possible settings				IMPORTANT	
		Lenze	Choice				
PCTRL							📖 7-149
C0222	PCTRL Vp	1.0	0.1	{0.1}	500.0	Process controller gain V_p	
C0223	PCTRL Tn	400	20 99999 ms switched off	{1 ms}	99999	Process controller integral component T_n	
C0224	PCTRL Kd	0.0	0.0	{0.1}	5.0	Process controller differential compconent K_d	
C0325	Vp2 adapt	1.0	0.1	{0.1}	500.0	Process controller adaptation gain (V_{p2})	
C0326	Vp3 adapt	1.0	0.1	{0.1}	500.0	Process controller adaptation gain (V_{p3})	
C0327	Set2 adapt	100.00	0.00	{0.01 %}	100.00	Process controller adaptation n_{set2} Set speed threshold of the process controller adaptation ● Mandatory: C0327 > C0328	
C0328	Set1 adapt	0.00	0.00	{0.01 %}	100.00	Process controller adaptation n_{set1} Set speed threshold of the process controller adaptation ● Mandatory: C0328 < C0327	
C0329	Adapt on/off	0	0 no 1 Extern Vp 2 Setpoint 3 Ctrl diff			Activate process controller adaptation no process controller adaptation external via input Adaptation via setpoint Adaptation via control difference	
C0332	PCTRL Tir	0.000	0.000	{0.001 s}	999.900	Process controller acceleration time T_{ir} ● Related to setpoint change 0…100 %	
C0333	PCTRL Tif	0.000	0.000	{0.001 s}	999.900	Process controller deceleration time T_{ir} ● Related to setpoint change 0…100 %	
C0336	DIS: act Vp		0.0	{0.1}	500.0	Process controller momentary V_p	
C0337	Bi/unipolar	0	0 bipolar 1 unipolar			Process controller range bipolar/unipolar	
[C0800]	CFG: SET	1000	FIXED0%		→ Selection list 1	Configuration setpoint input of process controller PCTRL1	📖 7-225
[C0801]	CFG: ACT	1000	FIXED0%		→ Selection list 1	Configuration actual value input of PCTRL1	📖 7-225
[C0802]	CFG: INFLU	1000	FIXED0%		→ Selection list 1	Configuration evaluation input of PCTRL1	📖 7-225
[C0803]	CFG: ADAPT	1000	FIXED0%		→ Selection list 1	Configuration adaptation input of PCTRL1	📖 7-225
[C0804]	CFG: INACT	1000	FIXED0		→ Selection list 2	Configuration deactivation input of PCTRL1	📖 7-225
[C0805]	CFG: I-OFF	1000	FIXED0		→ Selection list 2	Configuration digital input (switch off I-component) of PCTRL1	📖 7-225
C0808 1 2 3 4	 DIS: SET DIS: ACT DIS: INFLU DIS: ADAPT		-199.99	{0.01 %}	199.99	Analog input signals of PCTRL1	
C809 1 2	 DIS: INACT DIS: I-OFF					Digital input signals of PCTRL1	
PHCMP							📖 7-152
C0695	Function	2	1 IN 1 < IN2 2 |IN1| < |IN2|			Function comparator for phase signals PHCMP1 ● Compares the inputs IN1 and IN2	
[C0697] 1 2	 CFG: IN CFG: IN	 1000 1000	 FIXED 0INC FIXED 0INC		→ Selection list 3	Configuration phase inputs of PHCMP1	
C0698 1 2	 DIS: IN DIS: IN		-2147483647	{1}	2147483647	Phase input signals of PHCMP1	
PHDIV							📖 7-153
C0995	Division	0	-31	{1}	31	Division factor of phase division PHDIV1	

Configuration

Code	LCD	Possible settings				IMPORTANT	
		Lenze	Choice				
[C0996]	CFG: IN	1000	FIXED0INC		→ Selection list 3	Configuration input phase division PHDIV1	📖 7-225
C0997	DIS: IN		-2147483647	{1}	2147483647	Input signal of PHDIV1	
PHINT							📖 7-154
[C0990]	CFG: IN	1000	FIXEDPHI0		→ Selection list 4	Configuration input phase integrator PHINT1	📖 7-225
[C0991]	CFG: RESET	1000	FIXED0		→Selection list 2	Configuration reset input of PHINT1	📖 7-225
C0992	DIS: IN		-32767	{1}	32767	Input signal of PHINT1	
C0993	DIS: RESET					Digital input signal of PHINT1	
C1030	CFG: IN	1000	FIXED 0		→ Selection list 4	Configuration of the input signal PHINT2-IN	📖 7-225
C1031	CFG: RESET	1000	FIXED 0		→ Selection list 2	Configuration of the input signal PHINT2-RESET	📖 7-225
C1032	DIS: IN		-32767	{1 rpm}	32767	Display of the input signals PHINT2-IN	
C1033	DIS: RESET		0		1	Display of the input signals PHINT2-RESET	
PT1							📖 7-157
C0640	Delay T	20.00	0.01	{0.01 s}	50.00	Time constant of the PT1-1 component	
[C0641]	CFG: IN	1000	FIXED 0 %		→ Selection list 1	Configuration analog input of PT1-1	📖 7-225
C0642	DIS: IN		-199.99	{0.01 %}	199.99	Analog input signal of PT1-1	
R/L/Q							📖 7-158
[C0885]	CFG: R	1000	DIGIN 1		→ Selection list 2	Configuration digital input (CW rotation) of CW/CCW/Q	📖 7-225
[C0886]	CFG: L	1000	DIGIN 2		→ Selection list 2	Configuration digital input (CCW rotation) of CW/CCW/Q	📖 7-225
C0889 1 2	 DIS: R DIS: L					Digital input signals of R/L/Q	
RC							📖 7-22
C1300	Shaft format	2304	192	{1 units}	16000	LSF length shaft format of the machine, material feed for one revolution	📖 7-27
C1301	Enc const	8192	100	{1 p/rev}	32767	EC-LS, increments of the master encoder (e.g. at the mechanical longitudinal shaft of the machine) ● p/rev = pulses per revolution	📖 7-27
C1302	CCF	5376	192	{1 units}	16000	Cylinder circumference Circumference of the drive shaft (cutting cylinder or insetter shaft)	📖 7-27
C1303	MODE	0	0 0 1	 Cut mode Ins mode	1	Cross cutter / insetter determination of the operating mode	📖 7-27
C1304	Gear-num	30000	-32768	{1}	32767	Gearbox “numerator”, numerator of the mechanical gearbox ratio	📖 7-27
C1305	Gear-denom	30000	1	{1}	32767	Gearbox “denominator“, denominator of the mechanical gearbox ratio	📖 7-27
C1306	Unit select	0	0 0 1	 1/192 ” 0.1 mm	1	Selection measuring system (unit) 1 unit = 1/192” 1 unit = 0.1mm	📖 7-28
C1307 1 2	 DDIR EDIR	 0 0	 0 1	 normal (CW) inverse (CCW)		Selection of the drive’s direction of rotation	📖 7-28
C1308	Cut format	2304	192	{1 units}	16000	Cut format (CF), selection of the cut length	📖 7-29
C1309	Print format	4608	192	{1 units}	16000	Print format (PF), selection of the print format	📖 7-29
C1310	RPTRIM	0.00	-999.99	{0.01 mm}	999.99	Register trimming, relative	📖 7-39
C1311	RVTRIM	0.00	-999.99	{0.01 ‰}	999.99	Absolute material length trimming, input of the material length (stretch factor) ● ‰ referred to the basic value A2	📖 7-40
C1314	Reg setpoint	0.00	-999.99	{0.01 mm}	999.99	Register setpoint	📖 7-36

Code	LCD	Possible settings				IMPORTANT	
		Lenze	Choice				
C1315	N-RAV	1	1	{1}	30	Filter register difference Number of register error values which are used to generate an average value	📖 7-36
C1316	TP-window	40	0	{1 mm}	999	Register mark window width for the mark detection (E5) ● 0 = window switched off	📖 7-29 📖 7-34
C1317	TP-win offset	0.00	-99.99	{0.01 mm}	99.99	Relative mark window offset	📖 7-34
C1318	v-line thresh	0.0	0.0	{0.1 m/min}	999.9	Threshold line speed for the activation of the register control	
C1319	Time ref	1000	1	{1 ms}	1000	Time reference for RC-CMODE=1	📖 7-36
C1320	TDCR-E4/E5	0	-2000	{1 µs}	2000	Relative dead time compensation of the runtime differences between E4 and E5 ● compensates register offset depending on the line speed	📖 7-33
C1321	TDC-E5	0	-2000	{1}	2000	Absolute dead time compensation of the input E5 ● compensates reference of the display (C1287 of the line speed)	📖 7-33
C1322	VTRIM	0.10	-999.99	{.01 ‰/CF}	999.99	Speed of the gearbox factor adjustment with material length trimming	📖 7-40
C1323	ACC-COMP	0.00	-99.99	{0.01}	99.99	Acceleration compensation	
C1325	DV-LIM	0.10	0.00	{0.1}	99.99	Switching threshold ACC/DEC line ● Threshold for the generation of a digital signal depending on line speed changes of the master value	
C1326	COFF-LIM	100.00	0.00	{0.01 mm}	999.99	Switch-off threshold register controller ● Threshold for the disconnection of the register control depending on the momentary register error	
C1327	M-LIM1	0.50	0.00	{0.01 mm}	999.99	Switching threshold register error ● Threshold for the generation of a digital signal depending on the momentary register error.	
C1328	Threshold P21	32768	10	{1 incr}	$18 \cdot 10^8$	Threshold P21 ● Threshold for the generation of a digital signal depending on the current following error ● 65536 incr = 1 revolution	📖 7-44
C1329	MONIT P21	2	0 Trip 2 Warning 3 Off			Conf. P21 ● Monitoring configuration P21 (following error of the FB RC)	📖 7-44
C1330	Vprc reg ctrl	1.00	-99.99	{0.01 1/CF}	99.99	Vprc, Proportional gain of the register control	📖 7-36
C1331 1 2 3 4 5 6 7 8 9	 CCX0 CC+Y0 CC-Y0 CCX1 CC+Y1 CC-Y1 CCX2 CC+Y2 CC-Y2	 0.01 0.02 0.02 1.00 0.10 0.10 20.00 3.00 3.00	0.00	{0.01mm}	99.99	Control characteristic of the register control	📖 7-36
C1332	GC-filter	2.00	0.01	{0.01 s}	50.00	GC filter ● Filter time of the sensor compensation for gear control	📖 7-41
C1333	GC-DB	0.10	0.00	{0.01 mm}	99.99	GC-DB ● Dead range of the sensor compensation for gear control	📖 7-41

Configuration

Code	LCD	Possible settings				IMPORTANT	
		Lenze	Choice				
C1334	GC-CORR	1	-32768	{1 PF}	32767	GC-CORR ● Control time the sensor compensation for gear control ● Unit: LSB of the basic value DIS:A2*/DIS:B2	📖 7-41
C1335	GC-PFCNT	10	0	{1}	9999	GC-PFCNT ● Format counter gear control. Number of format pulses after which a position command is executed	📖 7-41
C1336	Reg. prepos.	2.00	-16000.00	{0.01 mm}	16000.00	LR ● Relative distance of the function "Set coarse register" ● The distance refers to the material	📖 7-42
C1337	VLR	400	0	{1 mm/s}	16000	● Final speed of the function Set coarse register ● Reference: Roll circumference (CCF)	📖 7-42
C1338	ACCLR	400	0	{1 mm/s²}	32767	● Acceleration/deceleration ramp of the function Set coarse register ● Reference: Roll circumference (CCF)	📖 7-42
C1342	Phase n-trim	-894	-32768	{1 incr}	32767	RC speed-dependent phase trimming ● Range: ±0.5 motor revolutions ● Reference: 15000 rpm	📖 7-43
C1345	RC-CTRL	0	0	{1}	65535	RC-CTRL Word, control word register control	
C1350					→ Selection list	Configuration analog inputs of the function block RC	📖 7-225
1	CFG: RPTRIM	19551					
2	CFG: PADD	1000					
3	CFG: WOFS	5650					
4	CFG: RSV	1000					
C1351			-32768	{1}	32767	Display analog inputs of the function block RC	
1	DIS: RPTRIM						
2	DIS: PADD						
3	DIS: WOFS						
4	04: DIS: RSV						
C1352					→ Selection list 2	Configuration digital inputs of the function block RC	📖 7-225
1	CFG: VTSET	1000					
2	CFG: PTSET	19400					
3	CFG: LRSET	20201					
4	CFG: PHSET	1000					
5	CFG: PHRES	10560					
6	CFG: CMODE	20204					
7	CFG: GCON	20203					
8	CFG: CINTRES	20209					
9	CFG: DXAEXT	20208					
10	CFG: CON	10565					
11	CFG: WSET	10500					
12	CFG: RINIT	10570					
13	CFG: GCHOLD	20210					
14	CFG: PMDIS	20205					
15	CFG: RSET	1000					
16	CFG: DXAHOLD	1000					

Code	LCD	Possible settings				IMPORTANT	
		Lenze	Choice				
C1353 1 2 3 4 5 6 7 8 9 10 11 12 13 14 15 16	 DIS: VTSET DIS: PTSET DIS: LRSET DIS: PHSET DIS: PHRES DIS: CMODE DIS: GCON DIS: CINTRES DIS: DXAEXT DIS: CON DIS: WSET DIS: RINIT DIS: GCHOLD DIS: PMDIS DIS: RSET DIS: DXAHOLD		0		1	Display digital inputs of the function block RC	
C1354 1 2	 CFG: DXAIN CFG: RVTRIM	 1000 1000			→ Selection list 3	Configuration of the inputs of type "phase" of the function block RC	📖 7-225
C1355 1 2	 DIS: DXAIN DIS: RVTRIM		-2147483648	{1}	2147483647	Display of the inputs signals of type "phase" of the function block RC	
C1356 1	 CFG: DFIN	 50			→ Selection list 4	Digital frequency input	📖 7-225
C1357 1	 DIS: DFIN		-32768	{1 rpm}	32767	Digital frequency input value	
C1360	DIS: LSF/CF		-21474836.48	{0.01}	21474836.47	Longitudinal shaft format/cut format	📖 7-29
C1361	DIS: PF/CF		-21474836.48	{0.01}	21474836.47	Number of sheets	📖 7-29
C1365	RC-STAT		0	{1}	65535	Status word register control	
C1370	DIS: A2*		-2147483648	{1}	2147483647	Gearbox factor A2*	
C1371	DIS: B2		-2147483648	{1}	2147483647	Gearbox factor B2	
C1374	DIS: XRACT		-21474836.48	{0.01 mm}	21474836.47	Current actual register in 1/100 mm	
C1375	DIS: DXA		-2147483648	{1 mm}	2147483647	Current register error after averaging in 1/100 mm	
C1376	DIS: RC-COUT		-2147483648	{1 incr/ms}	2147483647	Register control output in incr./ms	
C1377	DIS: RG-CORR		-2147483648	{1}	2147483647	Manipulated variable of the gear control ● Unit: 1/100000 of basic value A2	
C1378	DIS: RTR-ACT		-21474836.48	{0.01 mm}	21474836.47	Total of executed register trimmings	
C1379	DIS: RTR-RACT		-21474836.48	{0.01 mm}	21474836.47	Momentary value of remaining correction distance afte a RPTRIM input	
C1380	DIS: R-XMOFS		-2147483648	{1 incr}	2147483647	Actual register offset in incr.	
C1381 1 2 3 4 5 6	 DIS: DXR1 DIS: DXR2 DIS: DXR3 DIS: DXR4 DIS: DXR5 DIS: DXR6		-21474836.48	{0.01 mm}	21474836.47	Register error history	
C1382 1 2	 DIS: XP1 DIS: DXP		-2147483648	{1incr}	2147483647	 XP1, current latch value E5 DXP, distance between the last two marks E5	
C1383 1 2	 DIS: XQ1 DIS: DXQ		-2147483648	{1 incr}	2147483647	 XQ1, current latch value E4 DXQ, distance between the last two cylinder pulses E4	
C1384	DIS: X0-OFFS		-21474836.48	{0.01 mm}	21474836.47	Zero register offset	

Configuration

Code	LCD	Possible settings				IMPORTANT	
		Lenze	Choice				
C1387	DIS: XMCTR		-21474836.48	{0.01 mm}	21474836.47	Current position of the mark referred to window centre	
REF							📖 7-158
C0474 1 2	 FCODE PH FCODE PH	 2304 0	-2147483648	{1}	2147483648	Freely assignable code for phase signals ● 1 rev. = 65536 inc	
[C0920]	CFG: ON	1000	FIXED 0		→ Selection list 2	Configuration activating input homing of REF	📖 7-225
[C0921]	CFG: MARK	1000	FIXED 0		→ Selection list 2	Configuration digital homing switch of REF	📖 7-225
[C0922]	CFG: PHI-IN	1000	FIXED 0INC		→ Selection list 3	Configuration phase input of REF	📖 7-225
[C0923]	CFG: N-IN	1000	FIXED 0 %		→ Selection list 1	Configuration speed input of REF	📖 7-225
[C0924]	CFG: POS-LOAD	1000	FIXED 0		→ Selection list 2	Configuration of the control "Set position" of REF	📖 7-225
[C0925]	CFG: ACTPOS-I	1000	FIXED0INC		→ Selection list 2	Configuration of the position "Set position" of REF	📖 7-225
C0926 1 2 3 4	 DIS: ACTPOS-I DIS: PHI-IN DIS: ACTPOS DIS: TARGET		-2147483647	{1 inc}	2147483647	Phase input signals of REF	
C0927 1 2 3	 DIS: ON DIS: MARK DIS: LOAD					digital input signals of REF	
C0928	DIS: PHI-IN		-2147483647	{1 inc}	2147483647	Phase signal (following error) of REF ● 1 rev. = 65536 inc	
C0929	DIS: N-IN		-199.99	{0.01 %}	199.99	Analog input signal of REF	
[C0930]	Gearbox mot	1	1	{1}	65535	Gearbox factor (numerator) for REF	
[C0931]	Gearbox enc	1	1	{1}	65535	Gearbox factor (denominator) for REF	
C0932	REF mode	0	0 Mode 0 1 Mode 1 6 Mode 6 7 Mode 7 8 Mode 8 9 Mode 9 20 Mode 20 21 Mode 21			Homing mode for REF	
C0933	REF trans	0	 0 Rising trans 1 Falling trans			Referfence signal edge for REF rising edge falling edge	
C0934	REF offset	0	-2140000000	{1 inc}	2140000000	Reference offset for REF	
C0935	REF speed	2.0000	0.0001	{0.0001 % N_{max}}	100.0000	Homing speed for REF	
C0936	REF Ti	1.00	0.01	{0.01 s}	990.00	T_i time homing of REF ● Tir and Tif are identical	
RFG							📖 7-165
C0671	RFG1 Tir	0.000	0.000	{0.01 s}	999.900	Acceleration time T_{ir} of ramp generator RFG1	
C0672	RFG1 Tif	0.000	0.000	{0.01 s}	999.900	Deceleration time T_{if} of RFG1	
[C0673]	CFG: IN	1000	FIXED 0 %		→ Selection list 1	Configuration analog input of RFG1	📖 7-225
[C0674]	CFG: SET	1000	FIXED 0 %		→ Selection list 1	Configuration set input of RFG1	📖 7-225
[C0675]	CFG: LOAD	1000	FIXED 0		→ Selection list 2	Configuration digital input of RFG1	📖 7-225
C0676 1 2	 DIS: IN DIS: SET		-199.99	{0.01 %}	199.99	Analog input signals of RFG1	
C0677	DIS: LOAD					Digital input signal of RFG1	
S&H							📖 7-167
[C0570]	CFG: IN	1000	FIXED 0 %		→ Selection list 1	Configuration analog input of S&H1	📖 7-225

Code	LCD	Possible settings				IMPORTANT	
		Lenze	Choice				
[C0571]	CFG: LOAD	1000	FIXED 0		→ Selection list 2	Configuration digital input of S&H1	🕮 7-225
C0572	DIS: IN		-199.99	{0.01 %}	199.99	Analog input signal of S&H1	
C0573	DIS: LOAD					Digital input signal of S&H1	
SRFG							🕮 7-168
C1040	Acceleration	100.0	0.001	{0.001}	5000.000	SRFG1 Acceleration	
C1041	Jerk	0.200	0.001	{0.001s}	999.999	SRFG1 jerk	
C1042	CFG: IN	1000	FIXED 0		→ Selection list 1	Configuration of SRFG1-IN	🕮 7-225
C1043	CFG: SET	1000	FIXED 0		→ Selection list 1	Configuration of the signal SRFG1-SET	🕮 7-225
C1044	CFG: LOAD	1000	FIXED 0		→ Selection list 2	Configuration of the signal SRFG1-LOAD	🕮 7-225
C1045 1 2	 DIS: IN DIS: SET		-199.99	{0.01%}	199.99	Display of the signals of type "analog" of: SRFG1	
C1046	DIS: LOAD		0		1	Display of SRFG1-LOAD	
STAT							🕮 7-170
C0150	Status word		0	{1}	65535	Status word decimal when networked with automation interfaces ● display only ● binary interpretation indicates the bit states	
C0155	Status word 2		0	{1}	65535	Status word 2 Extended decimal status word ● display only ● binary interpretation indicates the bit states	
C0157 1 2 3 4 5 6 7	 DIS: STAT.B0 DIS: STAT.B2 DIS: STAT.B3 DIS: STAT.B4 DIS: STAT.B5 DIS: STAT.B14 DIS: STAT.B15		0		1	Status of the free bits of the status word	
STATE-BUS							🕮 7-171
[C0440]	CFG: STATE-BUS	1000			→ Selection list 2	Configuration state bus X5/ST	🕮 7-225
C0441	DIS: STATE-BUS					Monitoring signal State bus	
TRANS							🕮 7-172
C0710	Function	0	0 Rising trans 1 Falling trans 2 Both trans			Function edge evaluation TRANS1	
C0711	Pulse T	0.001	0.001	{0.001 s}	60.000	Pulse time of TRANS1	
[C0713]	CFG: IN	1000	FIXED 0		→ Selection list 2	Configuration digital input of TRANS1	🕮 7-225
C0714	DIS: IN					Digital input signal of TRANS1	
C0715	Function	0	0 Rising trans 1 Falling trans 2 Both trans			Function edge evaluation TRANS2	
C0716	Pulse T	0.001	0.001	{0.001 s}	60.000	Pulse time of TRANS2	
[C0718]	CFG: IN	1000	FIXED 0		→ Selection list 2	Configuration digital input of TRANS2	🕮 7-225
C0719	DIS: IN					Digital input signal of TRANS2	

7.9.2 Freely assignable codes

Code	LCD	Possible settings				IMPORTANT
		Lenze	Choice			
C0017	FCODE (Qmin)	50	-16000	{1 rpm}	16000	Switching threshold $n_{act.} < n_x$ ● $n_{act.} <$ C0017 activates the comparator output CMP1-OUT
C0019	Thresh nact=0	0	0	{1 rpm}	16000	Threshold when $n_{act.} = 0$ is recognized.
C0026 1 2	 FCODE (offset) FCODE (offset)	 0.00 0.00	-199.99	{0.01 %}	199.99	Freely assignable code for relative analog signals ● Used for: – Offset for terminal X6/1,2 – Offset for terminal X6/3,4
C0027 1 2	 FCODE (gain) FCODE (gain)	 100.00 100.00	-199.99	{0.01 %}	199.99	Freely assignable code for relative analog signals ● Used for: – Gain X6/1,2 – Gain X6/3,4
C0032	FCODE Gearbox	1	-32767	{1}	32767	Freely assignable code ● Used for: – Gearbox factor numerator
C0108 1 2	 FCODE (gain) FCODE (gain)	 100.00 100.00	-199.99	{0.01 %}	199.99	Freely assignable code for relative analog signals
C0109 1 2	 FCODE (offset) FCODE (offset)	 0.00 0.00	-199.99	{0.01 %}	199.99	Freely assignable code for relative analog signals
C0141	FCODE (setval)	0.00	-199.99	{0.01 %}	199.99	Freely assignable code for relative analog signals ● used as main setpoint in the configurations C0005 = xxx1
C0250	FCODE 1Bit					
C0470 1 2 3 4	 FCODE bit 0-7 FCODE bit 8-15 FCODE bit 16-23 FCODE bit 24-31	 0 0 0 0	0	{1}	255	Freely assignable code for digital signals ● The data words C0470 and C0471 are in parallel and are identical
C0471	FCODE 32 bit	0	0	{1}	4294967296	Freely assignable code for digital signals ● The data words C0470 and C0471 are in parallel and are identical
C0472 1 2 3 6 ... 19 20	 FCODE analog FCODE analog FCODE analog FCODE analog ... FCODE analog FCODE analog	 0.00 0.00 100.00 100.00 ... 0.00 0.00	-199.99	{0.01 %}	199.99	Freely assignable code for relative analog signals
C0473 1 2 3 4 5 ... 10	 FCODE abs FCODE abs FCODE abs FCODE abs FCODE abs ... FCODE abs	 0 4608 0 500 0 ... 0	-32767	{1}	32767	Freely assignable code for absolute analog signals
C0474 1 2	 FCODE PH FCODE PH	 2304 0	-2147483648	{1}	2147483648	Freely assignable code for phase signals ● 1 rev. = 65536 inc
C0475 1 2	 FCODE DF FCODE DF	 0 0	-16000	{1 rpm}	16000	Freely assignable code for phase difference signals ● 1 rev. = 65536 inc

7.9.3 Display codes

Code	LCD	Possible settings				IMPORTANT	
		Lenze	Choice				
C0059	Mot pole no.		1	{1}	50	Pole pair number of the motor ● display only	
C0060	Rotor pos		0	{1}	2047	current rotor position ● display only ● 1 rev. = 2048 inc	
C0061	Heatsink temp		0	{1 °C}	100	Heatsink temperature ● display only	
C0063	Mot temp		0	{1 °C}	200	Motor temperature ● display only	
C0064	Utilization		0	{1 %}	150	Controller load I x t during the last 180 s ● display only ● C0064 >100 % releases Trip OC5 ● Trip reset is possible only if C0064 < 95 %	
C0093	Drive ident					Controller identification ● display only	
			0	invalid			
			1	none			
			93xx	93xx		Type Lenze Register control	
C0099	S/W version		x.xx			Software version ● display only	
C0178	Op timer		0	{1 s}	4294967295	Elapsed operating time meter ● Time when the controller was enabled ● display only	
C0179	Mains timer		0	{1 s}	4294967295	Mains switch-on time meter ● Time when the mains was switched on ● display only	
C0183	Diagnostics					Drive diagnostics ● display only ● indicates fault or status information ● if several items or fault or status information are to be shown, the information with the smallest number is displayed	
			0	OK		No fault	
			10	Init		Initialization phase	
			91	Trip-Set C135			
			92	Trip-Set AIF			
			93	Trip-Set CAN			
			102	Trip		TRIP active	
			103	RFG P-OFF		Emergency stop was released	
			104	IMP Message		Message active	
			105	Power off			
			111	BSP C135		Operation inhibited	
			112	BSP AIF			
			113	BSP CAN			
			121	CINH term 28		Controller inhibited via X5/28	
			122	CINH int 1		DCTRL-CINH1	
			123	CINH int 2		DCTRL-CINH2	
			124	CINH C135/STP		STOP key of 9371BB	
			125	CINH AIF		Controller inhibited via AIF	
			126	CINH CAN		Controller inhibited via CAN	
			141	Lock mode		Restart protection active	
			142	IMP		Power outputs with high resistance	
			151	QSP ext term		QSP via MCTRL-QSP	
			152	QSP C135/STP		QSP via STOP key	
			153	QSP AIF		QSP via AIF	
			154	QSP CAN		QSP via CAN	
			250	Warning		Warning active	

Code	LCD	Possible settings		IMPORTANT	
		Lenze	Choice		
C0200	S/W Id			Software identification ● display only	
C0201	S/W date			Software release date ● display only	
C0203	Comm. no.		x / xxxx / xxxxx	Commission number ● display only	
C0204	Serial-No.		0 {1} 65535	Serial number ● display only	
C0464	Customer I/F		0 original 1 changed	Status of selected basic configuration ● display only ● Reassignment of terminals in a base configuration from C0005 does not change C0005 and sets C0464 = 1 ● Adding or removing of function blocks or changing the signal flow among the function blocks in a basic configuration of C0005 sets C0005 = 0 and C0464= 1	
C0466	CPU T remain			Residual process time for the processing of function blocks ● display only	

7.9.4 Fault and monitoring functions

Code	LCD	Possible settings		IMPORTANT	
		Lenze	Choice		
C0043	Trip reset			Reset of an active trip: ● Set C0043 = 0	
			0 no/trip reset 1 trip active	reset current trip Active trip	
C0067	Act trip		all fault indications → Selection list 10	Momentary fault indication ● display only	
C0121	OH7 limit	150	45 {1 °C} 150	Temperature threshold for early warning motor temperature (OH7 fault)	
C0122	OH4 limit	85	45 {1 °C} 85	Temperature threshold for warning heat sink temperature (fault OH4)	
C0126	MONIT CE0	3	0 Trip 2 Warning 3 Off	Configuration communication error monitoring with automation interface CE0	
C0161	Act trip		All fault indications	Momentary fault indiations (as under C0168/1) ● display only	📖 8-6
C0167	Reset failmem	0	0 No reset 1 Reset	Clears the history buffer	
C0168			All fault indications	Faults occurred History buffer ● List of fault occurred ● display only	
1	Fail no. act			now active	
2	Fail no. old1			last	
3	Fail no. old2			last but one	
4	Fail no. old3			last but two	
5	Fail no. old4			last but three	
6	Fail no. old5			last but four	
7	Fail no. old6			last but five	
8	Fail no. old7			last but six	

Code	LCD	Possible settings		IMPORTANT
		Lenze	Choice	
C0169			corresponding mains switch-on time	Occurrence of the faults History buffer ● List of times when the faults have occurred under C0168 ● related to C0179 ● display only
1	Failtime act			now active
2	Failtime old1			last
3	Failtime old2			last but one
4	Failtime old3			last but two
5	Failtime old4			last but three
6	Failtime old5			last but four
7	Failtime old6			last but five
8	Failtime old7			last but six
C0170			corresponding mains switch-on time	Fault frequency History buffer ● List of how often the faults have occurred consecutively under C0168 ● display only
1	Counter act			now active
2	Counter old1			last
3	Counter old2			last but one
4	Counter old3			last but two
5	Counter old4			last but three
6	Counter old5			last but four
7	Counter old6			last but five
8	Counter old7			last but six
C0581	MONIT EEr	0	0 Trip 1 Message 2 Warning 3 Off 4 Fail-QSP	Configuration monitoring EEr (external fault)
C0582	MONIT OH4	2	2 Warning 3 Off	Configuration monitoring OH4 (Heat sink temperature)
C0583	MONIT OH3	*	0 Trip 3 Off	Configuration monitoring OH3 (Motor temperature fixed) → depending on C0086
C0584	MONIT OH7	*	2 Warning 3 Off	Configuration monitoring OH7 (Motor temperature adjustable) → depending on C0086 ● Temperature monitoring via resolver input
C0585	MONIT OH8	3	0 Trip 2 Warning 3 Off	Configuration monitoring OH8 (Motor temperature adjustable) ● Temperature monitoring via PTC input
C0586	MONIT SD2	0	0 Trip 2 Warning 3 Off	Configuration monitoring SD2 (Resolver)
C0587	MONIT SD3	3	0 Trip 2 Warning 3 Off	Configuration monitoring SD3 (Encoder at X9)
C0588	MONIT H10/H11	3	0 Trip 2 Warning 3 Off	Configuration monitoring H10 and H11 (Temperature sensors in the controller)
C0589	MONIT P03	2	0 Trip 2 Warning 3 Off	Configuration monitoring P03 (following error DFSET)
C0590	MONIT P13	0	0 Trip 2 Warning 3 Off	Configuration monitoring P13 (Phase fault)

Configuration

Code	LCD	Possible settings			IMPORTANT	
		Lenze	Choice			
C0591	MONIT CE1	3	0 2 3	Trip Warning Off	Configuration monitoring CE1 (CAN-IN1 fault)	
C0592	MONIT CE2	3	0 2 3	Trip Warning Off	Configuration monitoring CE2 (CAN-IN2 fault)	
C0593	MONIT CE3	3	0 2 3	Trip Warning Off	Configuration monitoring CE3 (CAN-IN3 fault)	
C0594	MONIT SD6	*	0 2 3	Trip Warning Off	Configuration monitoring SD6 (Sensor Motor temperature) → depending on C0086	
C0595	MONIT CE4	3	0 2 3	Trip Warning Off	Configuration monitoring CE4 (CAN-Bus Off)	
C0596	Nmax limit	5500	0	{1 rpm} 16000	Monitoring: Speed of the machine	
C0597	MONIT LP1	3	0 2 3	Trip Warning Off	Configuration monitoring motor phase failure	
C0598	MONIT SD5	3	0 2 3	Trip Warning Off	Configuration monitoring master current at X5/1.2 < 2mA	
C0599	Limit LP 1	5.0	1.0	{0.1} 10.0	Current limit for motor phase failure monitoring	
C1329	MONIT P21	2	0 2 3	Trip Warning Off	Configuration P21 (following error RC)	

7.10 Selection list

Selection list 1, analog output signals (○)

000050	AIN1-OUT
000055	AIN2-OUT
000055	AIN2-OUT
000055	AIN2-OUT
000055	AIN2-OUT
000100	DFSET-NOUT
001000	FIXED0%
001006	FIXED100%
001007	FIXED-100%
005000	MCTRL-NSET2
005001	MCTRL-NACT
005002	MCTRL-MSET2
005003	MCTRL-MACT
005004	MCTRL-IACT
005005	MCTRL-DCVOLT
005009	MCTRL-PHI-ACT
005050	NSET-NOUT
005051	NSET-RFG-I
005100	MPOT1-OUT
005150	PCTRL1-OUT
005200	REF-N-SET
005500	ARIT1-OUT
005505	ARIT2-OUT
005550	ADD1-OUT
005600	RFG1-OUT
005610	SRFG1-OUT
005611	SRFG1-DIFF
005650	ASW1-OUT
005655	ASW2-OUT
005660	ASW3-OUT
005665	ASW4-OUT
005700	ANEG1-OUT
005705	ANEG2-OUT
005750	FIXSET1-OUT
005800	LIM1-OUT
005850	ABS1-OUT
005900	PT1-1-OUT
005950	DT1-1-OUT
006100	MFAIL-NOUT
006150	DB1-OUT
006200	CONV1-OUT
006205	CONV2-OUT
006210	CONV3-OUT
006215	CONV4-OUT
006230	CONVPHA1-OUT
006300	S&H1-OUT
006350	CURVE1-OUT
006400	FCNT1-OUT
006600	SYNC1-OUT3

010000	BRK-M-SET
013200	RC-NOUT
013201	RC-XMCTR
013202	RC-COUT
015028	UTILIZATION
019500	FCODE-17
019502	FCODE-26/1
019503	FCODE-26/2
019504	FCODE-27/1
019505	FCODE-27/2
019506	FCODE-32
019507	FCODE-37
019510	FCODE-108/1
019511	FCODE-108/2
019512	FCODE-109/1
019513	FCODE-109/2
019515	FCODE-141
019521	FCODE-472/1
019522	FCODE-472/2
019523	FCODE-472/3
019524	FCODE-472/4
019525	FCODE-472/5
019526	FCODE-472/6
019527	FCODE-472/7
019528	FCODE-472/8
019529	FCODE-472/9
019530	FCODE-472/10
019531	FCODE-472/11
019532	FCODE-472/12
019533	FCODE-472/13
019534	FCODE-472/14
019535	FCODE-472/15
019536	FCODE-472/16
019537	FCODE-472/17
019538	FCODE-472/18
019539	FCODE-472/19
019540	FCODE-472/20
019551	FCODE-473/1
019552	FCODE-473/2
019553	FCODE-473/3
019554	FCODE-473/4
019555	FCODE-473/5
019556	FCODE-473/6
019557	FCODE-473/7
019558	FCODE-473/8
019559	FCODE-473/9
019560	FCODE-473/10

020101	CAN-IN1.W1
020102	CAN-IN1.W2
020103	CAN-IN1.W3
020201	CAN-IN2.W1
020202	CAN-IN2.W2
020203	CAN-IN2.W3
020204	CAN-IN2.W4
020301	CAN-IN3.W1
020302	CAN-IN3.W2
020303	CAN-IN3.W3
020304	CAN-IN3.W4
025101	AIF-IN.W1
025102	AIF-IN.W2
025103	AIF-IN.W3

Configuration

Selection list 2, digital output signals (□)

000051	DIGIN1	010605	NOT2-OUT	015010	MONIT-LU	019537	FCODE-471.B16
000052	DIGIN2	010610	NOT3-OUT	015011	MONIT-OU	019538	FCODE-471.B17
000053	DIGIN3	010615	NOT4-OUT	015012	MONIT-EEr	019539	FCODE-471.B18
000054	DIGIN4	010620	NOT5-OUT	015013	MONIT-OC1	019540	FCODE-471.B19
000055	DIGIN5	010650	CMP1-OUT	015014	MONIT-OC2	019541	FCODE-471.B20
000060	STATE-BUS-O	010655	CMP2-OUT	015015	MONIT-LP1	019542	FCODE-471.B21
000065	DIGIN-CINH	010660	CMP3-OUT	015016	MONIT-OH	019543	FCODE-471.B22
000100	DFSET-ACK	010680	PHCMP1-OUT	015017	MONIT-OH3	019544	FCODE-471.B23
000500	DCTRL-RDY	010685	PHCMP2-OUT	015018	MONIT-OH4	019545	FCODE-471.B24
000501	DCTRL-CINH	010690	PHCMP3-OUT	015019	MONIT-OH7	019546	FCODE-471.B25
000502	DCTRL-INIT	010700	DIGDEL1-OUT	015020	MONIT-OH8	019547	FCODE-471.B26
000503	DCTRL-IMP	010705	DIGDEL2-OUT	015021	MONIT-Sd2	019548	FCODE-471.B27
000504	DCTRL-NACT=0	010750	TRANS1-OUT	015022	MONIT-Sd3	019549	FCODE-471.B28
000505	DCTRL-CW/CCW	010755	TRANS2-OUT	015023	MONIT-P03	019550	FCODE-471.B29
001000	FIXED0	010760	TRANS3-OUT	015024	MONIT-P13	019551	FCODE-471.B30
001001	FIXED1	010765	TRANS4-OUT	015026	MONIT-CE0	019552	FCODE-471.B31
002000	DCTRL-PAR*1-O	010900	FLIP1-OUT	015027	MONIT-NMAX	019751	FCODE-135.B0
002001	DCTRL-PAR*2-O	010905	FLIP2-OUT	015028	MONIT-OC5	019752	FCODE-135.B1
002002	DCTRL-PARBUSY	012000	PHINT1-FAIL	015029	MONIT-SD5	019753	FCODE-135.B2
005001	MCTRL-QSP-OUT	012005	PHINT2-FAIL	015030	MONIT-SD6	019755	FCODE-135.B4
005002	MCTRL-IMAX	012010	PHINT3-STAT	015031	MONIT-SD7	019756	FCODE-135.B5
005003	MCTRL-MMAX	013000	FEVAN1-BUSY	015032	MONIT-H07	019757	FCODE-135.B6
005050	NSET-RFG-I=0	013001	FEVAN1-FAIL	015033	MONIT-H10	019758	FCODE-135.B7
005200	REF-OK	013005	FEVAN2-BUSY	015034	MONIT-H11	019763	FCODE-135.B12
005201	REF-BUSY	013006	FEVAN2-FAIL	015040	MONIT-CE1	019764	FCODE-135.B13
006000	DFRFG1-FAIL	013200	RC-LROK	015041	MONIT-CE2	019765	FCODE-135.B14
006001	DFRFG1-SYNC	013201	RC-CMSTAT	015042	MONIT-CE3	019766	FCODE-135.B15
006100	MFAIL-STATUS	013202	RC-GCSTAT	015043	MONIT-CE4	020001	CAN-CTRL.B0
006101	MFAIL-I-RESET	013203	RC-CSTAT	015400	P-21	020002	CAN-CTRL.B1
006400	FCNT1-EQUAL	013204	RC-RSGN	019400	FCODE-ST473/1	020003	CAN-CTRL.B2
006600	SYNC1-STAT	013205	RC-X0LIM	019401	FCODE-ST473/2	020005	CAN-CTRL.B4
010000	BRK1-OUT	013206	RC-X1LIM	019450	FCODE-ST474/1	020006	CAN-CTRL.B5
010001	BRK1-CINH	013207	RC-COFFLIM	019451	FCODE-ST474/2	020007	CAN-CTRL.B6
010002	BRK1-QSP	013208	RC-MLIM1	019500	FCODE-250	020008	CAN-CTRL.B7
010003	BRK1-M-STORE	013209	RC-VLIM	019521	FCODE-471.B0	020013	CAN-CTRL.B12
010250	R/L/Q-QSP	013210	RC-FPM	019522	FCODE-471.B1	020014	CAN-CTRL.B13
010251	R/L/Q-R/L	013211	RC-FCM	019523	FCODE-471.B2	020015	CAN-CTRL.B14
010500	AND1-OUT	013212	RC-RINITOK	019524	FCODE-471.B3	020016	CAN-CTRL.B15
010505	AND2-OUT	013213	RC-WINOPEN	019525	FCODE-471.B4	020101	CAN-IN1.B0
010510	AND3-OUT	013214	RC-OUTSWIN	019526	FCODE-471.B5	020102	CAN-IN1.B1
010515	AND4-OUT	013215	RC-SCTR	019527	FCODE-471.B6	020103	CAN-IN1.B2
010520	AND5-OUT	013216	RC-TRIMOK	019528	FCODE-471.B7	020104	CAN-IN1.B3
010525	AND6-OUT	013217	RC-PMPULS	019529	FCODE-471.B8	020105	CAN-IN1.B4
010530	AND7-OUT	013218	RC-DVLIM	019530	FCODE-471.B9	020106	CAN-IN1.B5
010550	OR1-OUT	014050	STORE1-TP-INH	019531	FCODE-471.B10	020107	CAN-IN1.B6
010555	OR2-OUT	014055	STORE2-TP-INH	019532	FCODE-471.B11	020108	CAN-IN1.B7
010560	OR3-OUT	015000	DCTRL-TRIP	019533	FCODE-471.B12	020109	CAN-IN1.B8
010565	OR4-OUT	015001	DCTRL-MESS	019534	FCODE-471.B13	020110	CAN-IN1.B9
010570	OR5-OUT	015002	DCTRL-WARN	019535	FCODE-471.B14	020111	CAN-IN1.B10
010600	NOT1-OUT	015003	DCTRL-FAIL	019536	FCODE-471.B15	020112	CAN-IN1.B11

Selection list 2, digital output signals (□) - continued

020113	CAN-IN1.B12	020213	CAN-IN2.B12	020313	CAN-IN3.B12	025102	AIF-IN.B1
020114	CAN-IN1.B13	020214	CAN-IN2.B13	020314	CAN-IN3.B13	025103	AIF-IN.B2
020115	CAN-IN1.B14	020215	CAN-IN2.B14	020315	CAN-IN3.B14	025104	AIF-IN.B3
020116	CAN-IN1.B15	020216	CAN-IN2.B15	020316	CAN-IN3.B15	025105	AIF-IN.B4
020117	CAN-IN1.B16	020217	CAN-IN2.B16	020317	CAN-IN3.B16	025106	AIF-IN.B5
020118	CAN-IN1.B17	020218	CAN-IN2.B17	020318	CAN-IN3.B17	025107	AIF-IN.B6
020119	CAN-IN1.B18	020219	CAN-IN2.B18	020319	CAN-IN3.B18	025108	AIF-IN.B7
020120	CAN-IN1.B19	020220	CAN-IN2.B19	020320	CAN-IN3.B19	025109	AIF-IN.B8
020121	CAN-IN1.B20	020221	CAN-IN2.B20	020321	CAN-IN3.B20	025110	AIF-IN.B9
020122	CAN-IN1.B21	020222	CAN-IN2.B21	020322	CAN-IN3.B21	025111	AIF-IN.B10
020123	CAN-IN1.B22	020223	CAN-IN2.B22	020323	CAN-IN3.B22	025112	AIF-IN.B11
020124	CAN-IN1.B23	020224	CAN-IN2.B23	020324	CAN-IN3.B23	025113	AIF-IN.B12
020125	CAN-IN1.B24	020225	CAN-IN2.B24	020325	CAN-IN3.B24	025114	AIF-IN.B13
020126	CAN-IN1.B25	020226	CAN-IN2.B25	020326	CAN-IN3.B25	025115	AIF-IN.B14
020127	CAN-IN1.B26	020227	CAN-IN2.B26	020327	CAN-IN3.B26	025116	AIF-IN.B15
020128	CAN-IN1.B27	020228	CAN-IN2.B27	020328	CAN-IN3.B27	025117	AIF-IN.B16
020129	CAN-IN1.B28	020229	CAN-IN2.B28	020329	CAN-IN3.B28	025118	AIF-IN.B17
020130	CAN-IN1.B29	020230	CAN-IN2.B29	020330	CAN-IN3.B29	025119	AIF-IN.B18
020131	CAN-IN1.B30	020231	CAN-IN2.B30	020331	CAN-IN3.B30	025120	AIF-IN.B19
020132	CAN-IN1.B31	020232	CAN-IN2.B31	020332	CAN-IN3.B31	025121	AIF-IN.B20
020201	CAN-IN2.B0	020301	CAN-IN3.B0	025001	AIF-CTRL.B0	025122	AIF-IN.B21
020202	CAN-IN2.B1	020302	CAN-IN3.B1	025002	AIF-CTRL.B1	025123	AIF-IN.B22
020203	CAN-IN2.B2	020303	CAN-IN3.B2	025003	AIF-CTRL.B2	025124	AIF-IN.B23
020204	CAN-IN2.B3	020304	CAN-IN3.B3	025005	AIF-CTRL.B4	025125	AIF-IN.B24
020205	CAN-IN2.B4	020305	CAN-IN3.B4	025006	AIF-CTRL.B5	025126	AIF-IN.B25
020206	CAN-IN2.B5	020306	CAN-IN3.B5	025007	AIF-CTRL.B6	025127	AIF-IN.B26
020207	CAN-IN2.B6	020307	CAN-IN3.B6	025008	AIF-CTRL.B7	025128	AIF-IN.B27
020208	CAN-IN2.B7	020308	CAN-IN3.B7	025013	AIF-CTRL.B12	025129	AIF-IN.B28
020209	CAN-IN2.B8	020309	CAN-IN3.B8	025014	AIF-CTRL.B13	025130	AIF-IN.B29
020210	CAN-IN2.B9	020310	CAN-IN3.B9	025015	AIF-CTRL.B14	025131	AIF-IN.B30
020211	CAN-IN2.B10	020311	CAN-IN3.B10	025016	AIF-CTRL.B15	025132	AIF-IN.B31
020212	CAN.IN2.B11	020312	CAN-IN3.B11	025101	AIF-IN.B0		

Selection list 3, phase signals (▲)

000100	DFSET-PSET	013203	RC-XRACT	020103	CAN-IN1.D1
000101	DFSET-PSET2	013206	RC-XMOFS	020201	CAN-IN2.D1
001000	FIXED0INC	014000	PHDIFF1-OUT	020301	CAN-IN3.D1
005000	MCTRL-PHI-ANG	014050	STORE1-PHACT	025103	AIF-IN.D1
005200	REF-PSET	014051	STORE1-PH1	025104	AIF-IN.D2
005520	ARITPH1-OUT	014052	STORE1-PH2		
005580	PHADD1-OUT	014053	STORE1-PHDIFF		
005581	PHADD1-OUT2	014055	STORE2-PHACT		
006235	CONVPHPH1-OUT	014056	STORE2-PH1		
006600	SYNC1-OUT2	014057	STORE1-PH2		
012000	PHINT1-OUT	014100	GEARCOMP-OUT		
012005	PHINT2-OUT	019521	FCODE-474/1		
012010	PHINT3-OUT	019522	FCODE-474/2		
012050	PHDIV1-OUT	019523	FCODE-474/3		
013201	RC-PSET	019524	FCODE-474/4		
013202	RC-DXA	019525	FCODE-474/5		

Configuration

Selection list 4, phase difference signals (Δ)

000050	DFIN-OUT	005000	MCTRL-PHI-ACT	006230	CONVPHA1-OUT2	013200	RC-POUT
000100	DFSET-POUT	006000	DFRFG-OUT	006240	CONVPP1-OUT	019521	FCODE-475/1
000250	DFOUT-OUT	006220	CONV5-OUT	006600	SYNC1-OUT1	019522	FCODE-475/2
001000	FIXEDPHI-0	006225	CONV6-OUT				

Selection list 5, function blocks

000000	empty	005705	ANEG2	010505	AND2	010705	DIGDEL2
000050	AIN1	005800	LIM1	010510	AND3	010750	TRANS1
000055	AIN2	005850	ABS1	010515	AND4	010755	TRANS2
000070	AOUT1	005900	PT1-1	010520	AND5	010760	TRANS3
000075	AOUT2	005950	DT1-1	010525	AND6	010765	TRANS4
000100	DFSET	006000	DFRFG1	010530	AND7	010900	FLIP1
000200	DFIN	006150	DB1	010550	OR1	010905	FLIP2
000250	DFOUT	006200	CONV1	010555	OR2	012000	PHINT1
005050	NSET	006205	CONV2	010560	OR3	012005	PHINT2
005100	MPOT1	006210	CONV3	010565	OR4	012010	PHINT3
005150	PCTRL1	006215	CONV4	010570	OR5	012050	PHDIV1
005200	REF	006220	CONV5	010600	NOT1	013000	FEVAN1
005500	ARIT1	006225	CONV6	010605	NOT2	013005	FEVAN2
005505	ARIT2	006230	CONVPHA1	010610	NOT3	013010	FEVAN3
005520	ARITPH1	006235	CONVPHPH1	010615	NOT4	013100	OSZ
005550	ADD1	006240	CONVPP1	010620	NOT5	013200	RC
005580	PHADD1	006300	S&H1	010650	CMP1	014000	PHDIFF1
005600	RFG1	006350	CURVE1	010655	CMP2	014050	STORE1
005610	SRFG1	006400	FCNT1	010660	CMP3	014055	STORE2
005650	ASW1	006600	SYNC1	010680	PHCMP1	014100	GEARCOMP
005655	ASW2	010000	BRK1	010685	PHCMP2	015100	MLP1
005660	ASW3	010250	R/L/Q	010690	PHCMP3	020000	CAN-OUT
005665	ASW4	010500	AND1	010700	DIGDEL1	025000	AIF-OUT
005700	ANEG1						

Selection list 10, fault list

000000	No fail	000072	Pr1 trip	000153	P03 trip	002083	Sd3 warning
000011	OC1 trip	000073	Pr2 trip	000163	P13 trip	002085	Sd5 warning
000012	OC2 trip	000074	PEr trip	000166	P16 trip	002086	Sd6 warning
000015	OC5 trip	000075	Pr0 trip	000200	NMAX trip	002091	EER warning
000022	LUQ trip	000077	Pr3 trip	001020	OU message	002153	P03 warning
000032	LP1 trip	000078	Pr4 trip	001030	LU message	002163	P13 warning
000050	OH trip	000079	PI trip	001091	EEr message	002166	P16 warning
000053	OH3 trip	000082	Sd2 trip	002032	LP1 warning		
000057	OH7 trip	000083	Sd3 trip	002054	OH4 warning		
000058	OH8 trip	000085	Sd5 trip	002057	OH7 warning		
000061	CE0 trip	000086	Sd6 trip	002058	OH8 warning		
000062	CE1 trip	000087	Sd7 trip	002061	CE0 warning		
000063	CE2 trip	000091	EEr trip	002062	CE1 warning		
000064	CE3 trip	000105	H05 trip	002063	CE2 warning		
000065	CE4 trip	000107	H07 trip	002064	CE3 warning		
000070	U15 trip	000110	H10 trip	002065	CE4 warning		
000071	CCr trip	000111	H11 trip	002082	Sd2 warning		

7.11 Table of attributes

If you want to write programs on your own, you need the specifications given in the table of attributes. It includes all information for the communication with the controller using parameters.

How to read the table of attributes:

Column		Meaning	Entry	
Code		Meaning of the Lenze code	Cxxxx	
Index	dec	Index, under which the parameter is addressed. The subindex of array variables corresponds to the Lenze subcode number	24575 - Lenze code	Is only required for control via InterBus-S, Profibus DP or system bus (CAN).
	hex		5FFFh - Lenze code	
Data	DS	Data structure	E	Single variable (only one parameter element)
			A	Array variable (several parameter elements)
	DA	Number of array elements (subcodes)	xx	
	DT	Data type	B8	1 byte bit-coded
			B16	2 byte bit-coded
			B32	4 byte bit-coded
			FIX32	32 bit value with sign; decimal with four decimal codes
			I32	4 byte with sign
			U32	4 byte without sign
			VS	ASCII string
	Format	LECOM format (see also Operating Instructions of the fieldbus module 2102)	VD	ASCII decimal format
			VH	ASCII hexadecimal format
			VS	String format
			VO	Octett string format for data blocks
	DL	Data length in byte		The column "Important" contains further information
Access	LCM-R/W	Access authorization for LECOM	Ra	Reading is always permitted
			Wa	Writing is always permitted
			W	Writing is restricted
	Condition	Condition for writing	CINH	Writing permitted only with controller inhibit

Code	Index		Data					Access	
	dec	hex	DS	DA	DT	Format	DL	LCM-R/W	Condition
C0002	24573	5FFDh	E	1	FIX32	VD	4	Ra/W	CINH
C0003	24572	5FFCh	E	1	FIX32	VD	4	Ra/Wa	
C0004	24571	5FFBh	E	1	FIX32	VD	4	Ra/Wa	
C0005	24570	5FFAh	E	1	FIX32	VD	4	Ra/W	CINH
C0006	24569	5FF9h	E	1	FIX32	VD	4	Ra/W	CINH
C0009	24566	5FF6h	E	1	FIX32	VD	4	Ra/Wa	
C0011	24564	5FF4h	E	1	FIX32	VD	4	Ra/Wa	
C0012	24563	5FF3h	E	1	FIX32	VD	4	Ra/Wa	
C0013	24562	5FF2h	E	1	FIX32	VD	4	Ra/Wa	
C0017	24558	5FEEh	E	1	FIX32	VD	4	Ra/Wa	
C0018	24557	5FEDh	E	1	FIX32	VD	4	Ra/Wa	
C0019	24556	5FECh	E	1	FIX32	VD	4	Ra/Wa	
C0021	24554	5FEAh	E	1	FIX32	VD	4	Ra/Wa	
C0022	24553	5FE9h	E	1	FIX32	VD	4	Ra/Wa	
C0025	24550	5FE6h	E	1	FIX32	VD	4	Ra/W	CINH
C0026	24549	5FE5h	A	2	FIX32	VD	4	Ra/Wa	
C0027	24548	5FE4h	A	2	FIX32	VD	4	Ra/Wa	
C0030	24545	5FE1h	E	1	FIX32	VD	4	Ra/Wa	

Configuration

Code	Index		Data					Access	
	dec	hex	DS	DA	DT	Format	DL	LCM-R/W	Condition
C0032	24543	5FDFh	E	1	FIX32	VD	4	Ra/Wa	
C0033	24542	5FDEh	E	1	FIX32	VD	4	Ra/Wa	
C0034	24541	5FDDh	E	1	FIX32	VD	4	Ra/Wa	
C0037	24538	5FDAh	E	1	FIX32	VD	4	Ra/Wa	
C0039	24536	5FD8h	A	15	FIX32	VD	4	Ra/Wa	
C0040	24535	5FD7h	E	1	FIX32	VD	4	Ra/Wa	
C0042	24533	5FD5h	E	1	FIX32	VD	4	Ra	
C0043	24532	5FD4h	E	1	FIX32	VD	4	Ra/Wa	
C0045	24530	5FD2h	E	1	FIX32	VD	4	Ra	
C0046	24529	5FD1h	E	1	FIX32	VD	4	Ra	
C0049	24526	5FCEh	E	1	FIX32	VD	4	Ra	
C0050	24525	5FCDh	E	1	FIX32	VD	4	Ra	
C0051	24524	5FCCh	E	1	FIX32	VD	4	Ra	
C0052	24523	5FCBh	E	1	FIX32	VD	4	Ra	
C0053	24522	5FCAh	E	1	FIX32	VD	4	Ra	
C0054	24521	5FC9h	E	1	FIX32	VD	4	Ra	
C0056	24519	5FC7h	E	1	FIX32	VD	4	Ra	
C0057	24518	5FC6h	E	1	FIX32	VD	4	Ra	
C0058	24517	5FC5h	E	1	FIX32	VD	4	Ra/Wa	
C0059	24516	5FC4h	E	1	FIX32	VD	4	Ra	
C0060	24515	5FC3h	E	1	FIX32	VD	4	Ra	
C0061	24514	5FC2h	E	1	FIX32	VD	4	Ra	
C0063	24512	5FC0h	E	1	FIX32	VD	4	Ra	
C0064	24511	5FBFh	E	1	FIX32	VD	4	Ra	
C0067	24508	5FBCh	E	1	FIX32	VD	4	Ra	
C0070	24505	5FB9h	E	1	FIX32	VD	4	Ra/Wa	
C0071	24504	5FB8h	E	1	FIX32	VD	4	Ra/Wa	
C0072	24503	5FB7h	E	1	FIX32	VD	4	Ra/Wa	
C0075	24500	5FB4h	E	1	FIX32	VD	4	Ra/Wa	
C0076	24499	5FB3h	E	1	FIX32	VD	4	Ra/Wa	
C0077	24498	5FB2h	E	1	FIX32	VD	4	Ra/Wa	
C0078	24497	5FB1h	E	1	FIX32	VD	4	Ra/Wa	
C0081	24494	5FAEh	E	1	FIX32	VD	4	Ra/W	CINH
C0084	24491	5FABh	E	1	FIX32	VD	4	Ra/W	CINH
C0085	24490	5FAAh	E	1	FIX32	VD	4	Ra/W	CINH
C0086	24489	5FA9h	E	1	FIX32	VD	4	Ra/W	CINH
C0087	24488	5FA8h	E	1	FIX32	VD	4	Ra/W	CINH
C0088	24487	5FA7h	E	1	FIX32	VD	4	Ra/W	CINH
C0089	24486	5FA6h	E	1	FIX32	VD	4	Ra/W	CINH
C0090	24485	5FA5h	E	1	FIX32	VD	4	Ra/W	CINH
C0091	24484	5FA4h	E	1	FIX32	VD	4	Ra/W	CINH
C0093	24482	5FA2h	E	1	FIX32	VD	4	Ra	
C0094	24481	5FA1h	E	1	FIX32	VD	4	Ra/Wa	
C0095	24480	5FA0h	E	1	FIX32	VD	4	Ra/W	CINH
C0096	24479	5F9Fh	A	2	FIX32	VD	4	Ra/Wa	
C0099	24476	5F9Ch	E	1	FIX32	VD	4	Ra	
C0101	24474	5F9Ah	A	15	FIX32	VD	4	Ra/Wa	
C0103	24472	5F98h	A	15	FIX32	VD	4	Ra/Wa	
C0105	24470	5F96h	E	1	FIX32	VD	4	Ra/Wa	
C0108	24467	5F93h	A	2	FIX32	VD	4	Ra/Wa	
C0109	24466	5F92h	A	2	FIX32	VD	4	Ra/Wa	
C0114	24461	5F8Dh	A	5	FIX32	VD	4	Ra/Wa	

Code	Index		Data					Access	
	dec	hex	DS	DA	DT	Format	DL	LCM-R/W	Condition
C0116	24459	5F8Bh	A	32	FIX32	VD	4	Ra/W	CINH
C0117	24458	5F8Ah	A	4	FIX32	VD	4	Ra/W	CINH
C0118	24457	5F89h	A	4	FIX32	VD	4	Ra/Wa	
C0121	24454	5F86h	E	1	FIX32	VD	4	Ra/Wa	
C0122	24453	5F85h	E	1	FIX32	VD	4	Ra/Wa	
C0125	24450	5F82h	E	1	FIX32	VD	4	Ra/Wa	
C0126	24449	5F81h	E	1	FIX32	VD	4	Ra/Wa	
C0130	24445	5F7Dh	E	1	FIX32	VD	4	Ra	
C0134	24441	5F79h	E	1	FIX32	VD	4	Ra/Wa	
C0135	24440	5F78h	E	1	B16	VH	2		
C0136	24439	5F77h	A	3	B16	VH	2	Ra	
C0141	24434	5F72h	E	1	FIX32	VD	4	Ra/Wa	
C0142	24433	5F71h	E	1	FIX32	VD	4	Ra/Wa	
C0150	24425	5F69h	E	1	B16	VH	2	Ra	
C0151	24424	5F68h	E	1	B32	VH	4	Ra	
C0155	24420	5F64h	E	1	B16	VH	2	Ra	
C0156	24419	5F63h	A	7	FIX32	VD	4	Ra/W	CINH
C0157	24418	5F62h	A	7	FIX32	VD	4	Ra	
C0161	24414	5F5Eh	E	1	FIX32	VD	4	Ra	
C0167	24408	5F58h	E	1	FIX32	VD	4	Ra/Wa	
C0168	24407	5F57h	A	8	FIX32	VD	4	Ra	
C0169	24406	5F56h	A	8	U32	VH	4	Ra	
C0170	24405	5F55h	A	8	FIX32	VD	4	Ra	
C0172	24403	5F53h	E	1	FIX32	VD	4	Ra/Wa	
C0173	24402	5F52h	E	1	FIX32	VD	4	Ra/Wa	
C0178	24397	5F4Dh	E	1	U32	VH	4	Ra	
C0179	24396	5F4Ch	E	1	U32	VH	4	Ra	
C0182	24393	5F49h	E	1	FIX32	VD	4	Ra/Wa	
C0183	24392	5F48h	E	1	FIX32	VD	4	Ra	
C0190	24385	5F41h	E	1	FIX32	VD	4	Ra/Wa	
C0195	24380	5F3Ch	E	1	FIX32	VD	4	Ra/Wa	
C0196	24379	5F3Bh	E	1	FIX32	VD	4	Ra/Wa	
C0200	24375	5F37h	E	1	VS	VS	14	Ra	
C0201	24374	5F36h	E	1	VS	VS	20	Ra	
C0202	24373	5F35h	E	1	FIX32	VD	4	Ra	
C0203	24372	5F34h	E	1	VS	VS	12	Ra	
C0204	24371	5F33h	E	1	FIX32	VD	4	Ra	
C0206	24369	5F31h	E	1	VS	VS	13	Ra	
C0207	24368	5F30h	E	1	VS	VS	14	Ra	
C0208	24367	5F2Fh	E	1	VS	VS	14	Ra	
C0209	24366	5F2Eh	E	1	VS	VS	14	Ra	
C0220	24355	5F23h	E	1	FIX32	VD	4	Ra/Wa	
C0221	24354	5F22h	E	1	FIX32	VD	4	Ra/Wa	
C0222	24353	5F21h	E	1	FIX32	VD	4	Ra/Wa	
C0223	24352	5F20h	E	1	FIX32	VD	4	Ra/Wa	
C0224	24351	5F1Fh	E	1	FIX32	VD	4	Ra/Wa	
C0241	24334	5F0Eh	E	1	FIX32	VD	4	Ra/Wa	
C0244	24331	5F0Bh	E	1	FIX32	VD	4	Ra/Wa	
C0250	24325	5F05h	E	1	FIX32	VD	4	Ra/Wa	
C0252	24323	5F03h	E	1	I32	VH	4	Ra/Wa	
C0253	24322	5F02h	E	1	FIX32	VD	4	Ra/Wa	
C0254	24321	5F01h	E	1	FIX32	VD	4	Ra/Wa	

Configuration

Code	Index		Data					Access	
	dec	hex	DS	DA	DT	Format	DL	LCM-R/W	Condition
C0255	24320	5F00h	E	1	U32	VH	4	Ra/Wa	
C0260	24315	5EFBh	E	1	FIX32	VD	4	Ra/Wa	
C0261	24314	5EFAh	E	1	FIX32	VD	4	Ra/Wa	
C0262	24313	5EF9h	E	1	FIX32	VD	4	Ra/Wa	
C0263	24312	5EF8h	E	1	FIX32	VD	4	Ra/Wa	
C0264	24311	5EF7h	E	1	FIX32	VD	4	Ra/Wa	
C0265	24310	5EF6h	E	1	FIX32	VD	4	Ra/Wa	
C0267	24308	5EF4h	A	2	FIX32	VD	4	Ra/W	CINH
C0268	24307	5EF3h	E	1	FIX32	VD	4	Ra/W	CINH
C0269	24306	5EF2h	A	3	FIX32	VD	4	Ra	
C0291	24284	5EDCh	E	1	FIX32	VD	4	Ra/Wa	
C0292	24283	5EDBh	E	1	FIX32	VD	4	Ra/Wa	
C0293	24282	5EDAh	E	1	FIX32	VD	4	Ra/Wa	
C0294	24281	5ED9h	E	1	FIX32	VD	4	Ra/Wa	
C0295	24280	5ED8h	E	1	FIX32	VD	4	Ra/Wa	
C0296	24279	5ED7h	E	1	FIX32	VD	4	Ra/Wa	
C0325	24250	5EBAh	E	1	FIX32	VD	4	Ra/Wa	
C0326	24249	5EB9h	E	1	FIX32	VD	4	Ra/Wa	
C0327	24248	5EB8h	E	1	FIX32	VD	4	Ra/Wa	
C0328	24247	5EB7h	E	1	FIX32	VD	4	Ra/Wa	
C0329	24246	5EB6h	E	1	FIX32	VD	4	Ra/Wa	
C0332	24243	5EB3h	E	1	FIX32	VD	4	Ra/Wa	
C0333	24242	5EB2h	E	1	FIX32	VD	4	Ra/Wa	
C0336	24239	5EAFh	E	1	FIX32	VD	4	Ra	
C0337	24238	5EAEh	E	1	FIX32	VD	4	Ra/Wa	
C0338	24237	5EADh	E	1	FIX32	VD	4	Ra/Wa	
C0339	24236	5EACh	A	2	FIX32	VD	4	Ra/W	CINH
C0340	24235	5EABh	A	2	FIX32	VD	4	Ra	
C0350	24225	5EA1h	E	1	FIX32	VD	4	Ra/Wa	
C0351	24224	5EA0h	E	1	FIX32	VD	4	Ra/Wa	
C0352	24223	5E9Fh	E	1	FIX32	VD	4	Ra/Wa	
C0353	24222	5E9Eh	A	3	FIX32	VD	4	Ra/Wa	
C0354	24221	5E9Dh	A	6	FIX32	VD	4	Ra/Wa	
C0355	24220	5E9Ch	A	6	FIX32	VD	4	Ra	
C0356	24219	5E9Bh	A	4	FIX32	VD	4	Ra/Wa	
C0357	24218	5E9Ah	A	3	FIX32	VD	4	Ra/Wa	
C0358	24217	5E99h	E	1	FIX32	VD	4	Ra/Wa	
C0359	24216	5E98h	E	1	FIX32	VD	4	Ra	
C0360	24215	5E97h	A	12	FIX32	VD	4	Ra	
C0361	24214	5E96h	A	12	FIX32	VD	4	Ra	
C0362	24213	5E95h	E	1	FIX32	VD	4	Ra	
C0363	24212	5E94h	E	1	FIX32	VD	4	Ra/Wa	
C0364	24211	5E93h	E	1	FIX32	VD	4	Ra/W	CINH
C0365	24210	5E92h	E	1	FIX32	VD	4	Ra	
C0366	24209	5E91h	E	1	FIX32	VD	4	Ra/Wa	
C0367	24208	5E90h	E	1	FIX32	VD	4	Ra/Wa	
C0368	24207	5E8Fh	E	1	FIX32	VD	4	Ra/Wa	
C0369	24206	5E8Eh	E	1	FIX32	VD	4	Ra/Wa	
C0400	24175	5E6Fh	E	1	FIX32	VD	4	Ra	
C0402	24173	5E6Dh	E	1	FIX32	VD	4	Ra/W	CINH
C0403	24172	5E6Ch	E	1	FIX32	VD	4	Ra/W	CINH
C0404	24171	5E6Bh	A	2	FIX32	VD	4	Ra	

Code	Index		Data					Access	
	dec	hex	DS	DA	DT	Format	DL	LCM-R/W	Condition
C0405	24170	5E6Ah	E	1	FIX32	VD	4	Ra	
C0407	24168	5E68h	E	1	FIX32	VD	4	Ra/W	CINH
C0408	24167	5E67h	E	1	FIX32	VD	4	Ra/W	CINH
C0409	24166	5E66h	A	2	FIX32	VD	4	Ra	
C0416	24159	5E5Fh	E	1	U32	VH	4	Ra/W	CINH
C0420	24155	5E5Bh	E	1	FIX32	VD	4	Ra/W	CINH
C0421	24154	5E5Ah	E	1	FIX32	VD	4	Ra/W	CINH
C0425	24150	5E56h	E	1	FIX32	VD	4	Ra/Wa	
C0426	24149	5E55h	E	1	FIX32	VD	4	Ra	
C0427	24148	5E54h	E	1	FIX32	VD	4	Ra/Wa	
C0429	24146	5E52h	E	1	FIX32	VD	4	Ra/Wa	
C0431	24144	5E50h	E	1	FIX32	VD	4	Ra/W	CINH
C0432	24143	5E4Fh	E	1	FIX32	VD	4	Ra/W	CINH
C0433	24142	5E4Eh	E	1	FIX32	VD	4	Ra/W	CINH
C0434	24141	5E4Dh	A	3	FIX32	VD	4	Ra	
C0436	24139	5E4Bh	E	1	FIX32	VD	4	Ra/W	CINH
C0437	24138	5E4Ah	E	1	FIX32	VD	4	Ra/W	CINH
C0438	24137	5E49h	E	1	FIX32	VD	4	Ra/W	CINH
C0439	24136	5E48h	A	3	FIX32	VD	4	Ra	
C0440	24135	5E47h	E	1	FIX32	VD	4	Ra/W	CINH
C0441	24134	5E46h	E	1	FIX32	VD	4	Ra	
C0443	24132	5E44h	E	1	B8	VH	1	Ra	
C0444	24131	5E43h	A	4	FIX32	VD	4	Ra	
C0450	24125	5E3Dh	E	1	FIX32	VD	4	Ra/W	CINH
C0451	24124	5E3Ch	E	1	FIX32	VD	4	Ra/W	CINH
C0452	24123	5E3Bh	E	1	FIX32	VD	4	Ra/W	CINH
C0458	24117	5E35h	A	2	FIX32	VD	4	Ra	
C0459	24116	5E34h	E	1	FIX32	VD	4	Ra	
C0464	24111	5E2Fh	E	1	FIX32	VD	4	Ra	
C0465	24110	5E2Eh	A	50	FIX32	VD	4	Ra/W	CINH
C0466	24109	5E2Dh	E	1	FIX32	VD	4	Ra	
C0469	24106	5E2Ah	E	1	FIX32	VD	4	Ra/W	CINH
C0470	24105	5E29h	A	4	B8	VH	1	Ra/Wa	
C0471	24104	5E28h	E	1	B32	VH	4	Ra/Wa	
C0472	24103	5E27h	A	20	FIX32	VD	4	Ra/Wa	
C0473	24102	5E26h	A	10	FIX32	VD	4	Ra/Wa	
C0474	24101	5E25h	A	5	I32	VH	4	Ra/Wa	
C0475	24100	5E24h	A	2	FIX32	VD	4	Ra/Wa	
C0490	24085	5E15h	E	1	FIX32	VD	4	Ra/W	CINH
C0495	24080	5E10h	E	1	FIX32	VD	4	Ra/W	CINH
C0497	24078	5E0Eh	E	1	FIX32	VD	4	Ra/Wa	
C0517	24058	5DFAh	A	32	FIX32	VD	4	Ra/Wa	
C0520	24055	5DF7h	E	1	FIX32	VD	4	Ra/W	CINH
C0521	24054	5DF6h	E	1	FIX32	VD	4	Ra/W	CINH
C0522	24053	5DF5h	E	1	FIX32	VD	4	Ra/W	CINH
C0523	24052	5DF4h	E	1	FIX32	VD	4	Ra/W	CINH
C0524	24051	5DF3h	E	1	FIX32	VD	4	Ra/W	CINH
C0525	24050	5DF2h	E	1	FIX32	VD	4	Ra/W	CINH
C0526	24049	5DF1h	E	1	FIX32	VD	4	Ra/W	CINH
C0527	24048	5DF0h	E	1	FIX32	VD	4	Ra/W	CINH
C0528	24047	5DEFh	A	2	I32	VH	4	Ra	
C0529	24046	5DEEh	E	1	FIX32	VD	4	Ra/Wa	

Configuration

Code	Index		Data					Access	
	dec	hex	DS	DA	DT	Format	DL	LCM-R/W	Condition
C0530	24045	5DEDh	E	1	FIX32	VD	4	Ra/Wa	
C0531	24044	5DECh	E	1	FIX32	VD	4	Ra/Wa	
C0532	24043	5DEBh	E	1	FIX32	VD	4	Ra/Wa	
C0533	24042	5DEAh	E	1	FIX32	VD	4	Ra/Wa	
C0534	24041	5DE9h	E	1	FIX32	VD	4	Ra/Wa	
C0535	24040	5DE8h	E	1	FIX32	VD	4	Ra/Wa	
C0536	24039	5DE7h	A	3	FIX32	VD	4	Ra	
C0537	24038	5DE6h	E	1	FIX32	VD	4	Ra	
C0538	24037	5DE5h	A	3	FIX32	VD	4	Ra	
C0539	24036	5DE4h	E	1	FIX32	VD	4	Ra	
C0540	24035	5DE3h	E	1	FIX32	VD	4	Ra/Wa	
C0541	24034	5DE2h	E	1	FIX32	VD	4	Ra/W	CINH
C0542	24033	5DE1h	E	1	FIX32	VD	4	Ra/W	CINH
C0544	24031	5DDFh	E	1	FIX32	VD	4	Ra/W	CINH
C0545	24030	5DDEh	E	1	FIX32	VD	4	Ra/Wa	
C0546	24029	5DDDh	E	1	U32	VH	4	Ra/Wa	
C0547	24028	5DDCh	E	1	FIX32	VD	4	Ra	
C0548	24027	5DDBh	E	1	FIX32	VD	4	Ra	
C0549	24026	5DDAh	E	1	FIX32	VD	4	Ra	
C0560	24015	5DCFh	A	15	FIX32	VD	4	Ra/Wa	
C0561	24014	5DCEh	E	1	FIX32	VD	4	Ra/W	CINH
C0562	24013	5DCDh	A	4	FIX32	VD	4	Ra/W	CINH
C0563	24012	5DCCh	E	1	FIX32	VD	4	Ra	
C0564	24011	5DCBh	A	4	FIX32	VD	4	Ra	
C0570	24005	5DC5h	E	1	FIX32	VD	4	Ra/W	CINH
C0571	24004	5DC4h	E	1	FIX32	VD	4	Ra/W	CINH
C0572	24003	5DC3h	E	1	FIX32	VD	4	Ra	
C0573	24002	5DC2h	E	1	FIX32	VD	4	Ra	
C0577	23998	5DBEh	E	1	FIX32	VD	4	Ra/Wa	
C0578	23997	5DBDh	E	1	FIX32	VD	4	Ra/Wa	
C0581	23994	5DBAh	E	1	FIX32	VD	4	Ra/Wa	
C0582	23993	5DB9h	E	1	FIX32	VD	4	Ra/Wa	
C0583	23992	5DB8h	E	1	FIX32	VD	4	Ra/Wa	
C0584	23991	5DB7h	E	1	FIX32	VD	4	Ra/Wa	
C0585	23990	5DB6h	E	1	FIX32	VD	4	Ra/Wa	
C0586	23989	5DB5h	E	1	FIX32	VD	4	Ra/Wa	
C0587	23988	5DB4h	E	1	FIX32	VD	4	Ra/Wa	
C0588	23987	5DB3h	E	1	FIX32	VD	4	Ra/Wa	
C0589	23986	5DB2h	E	1	FIX32	VD	4	Ra/Wa	
C0590	23985	5DB1h	E	1	FIX32	VD	4	Ra/Wa	
C0591	23984	5DB0h	E	1	FIX32	VD	4	Ra/Wa	
C0592	23983	5DAFh	E	1	FIX32	VD	4	Ra/Wa	
C0593	23982	5DAEh	E	1	FIX32	VD	4	Ra/Wa	
C0594	23981	5DADh	E	1	FIX32	VD	4	Ra/Wa	
C0595	23980	5DACh	E	1	FIX32	VD	4	Ra/Wa	
C0596	23979	5DABh	E	1	FIX32	VD	4	Ra/Wa	
C0597	23978	5DAAh	E	1	FIX32	VD	4	Ra/Wa	
C0598	23977	5DA9h	E	1	FIX32	VD	4	Ra/Wa	
C0599	23976	5DA8h	E	1	FIX32	VD	4	Ra/Wa	
C0600	23975	5DA7h	E	1	FIX32	VD	4	Ra/Wa	
C0601	23974	5DA6h	A	2	FIX32	VD	4	Ra/W	CINH
C0602	23973	5DA5h	A	2	FIX32	VD	4	Ra	

Code	Index		Data					Access	
	dec	hex	DS	DA	DT	Format	DL	LCM-R/W	Condition
C0610	23965	5D9Dh	A	3	FIX32	VD	4	Ra/W	CINH
C0611	23964	5D9Ch	A	3	FIX32	VD	4	Ra	
C0620	23955	5D93h	E	1	FIX32	VD	4	Ra/Wa	
C0621	23954	5D92h	E	1	FIX32	VD	4	Ra/Wa	
C0622	23953	5D91h	E	1	FIX32	VD	4	Ra/W	CINH
C0623	23952	5D90h	E	1	FIX32	VD	4	Ra	
C0630	23945	5D89h	E	1	FIX32	VD	4	Ra/Wa	
C0631	23944	5D88h	E	1	FIX32	VD	4	Ra/Wa	
C0632	23943	5D87h	E	1	FIX32	VD	4	Ra/W	CINH
C0633	23942	5D86h	E	1	FIX32	VD	4	Ra	
C0640	23935	5D7Fh	E	1	FIX32	VD	4	Ra/Wa	
C0641	23934	5D7Eh	E	1	FIX32	VD	4	Ra/W	CINH
C0642	23933	5D7Dh	E	1	FIX32	VD	4	Ra	
C0650	23925	5D75h	E	1	FIX32	VD	4	Ra/Wa	
C0651	23924	5D74h	E	1	FIX32	VD	4	Ra/Wa	
C0652	23923	5D73h	E	1	FIX32	VD	4	Ra/W	CINH
C0653	23922	5D72h	E	1	FIX32	VD	4	Ra/Wa	
C0654	23921	5D71h	E	1	FIX32	VD	4	Ra	
C0655	23920	5D70h	E	1	FIX32	VD	4	Ra/Wa	
C0656	23919	5D6Fh	E	1	FIX32	VD	4	Ra/Wa	
C0657	23918	5D6Eh	E	1	FIX32	VD	4	Ra/W	CINH
C0658	23917	5D6Dh	E	1	FIX32	VD	4	Ra	
C0661	23914	5D6Ah	E	1	FIX32	VD	4	Ra/W	CINH
C0662	23913	5D69h	E	1	FIX32	VD	4	Ra	
C0671	23904	5D60h	E	1	FIX32	VD	4	Ra/Wa	
C0672	23903	5D5Fh	E	1	FIX32	VD	4	Ra/Wa	
C0673	23902	5D5Eh	E	1	FIX32	VD	4	Ra/W	CINH
C0674	23901	5D5Dh	E	1	FIX32	VD	4	Ra/W	CINH
C0675	23900	5D5Ch	E	1	FIX32	VD	4	Ra/W	CINH
C0676	23899	5D5Bh	A	2	FIX32	VD	4	Ra	
C0677	23898	5D5Ah	E	1	FIX32	VD	4	Ra	
C0680	23895	5D57h	E	1	FIX32	VD	4	Ra/Wa	
C0681	23894	5D56h	E	1	FIX32	VD	4	Ra/Wa	
C0682	23893	5D55h	E	1	FIX32	VD	4	Ra/Wa	
C0683	23892	5D54h	A	2	FIX32	VD	4	Ra/W	CINH
C0684	23891	5D53h	A	2	FIX32	VD	4	Ra	
C0685	23890	5D52h	E	1	FIX32	VD	4	Ra/Wa	
C0686	23889	5D51h	E	1	FIX32	VD	4	Ra/Wa	
C0687	23888	5D50h	E	1	FIX32	VD	4	Ra/Wa	
C0688	23887	5D4Fh	A	2	FIX32	VD	4	Ra/W	CINH
C0689	23886	5D4Eh	A	2	FIX32	VD	4	Ra	
C0690	23885	5D4Dh	E	1	FIX32	VD	4	Ra/Wa	
C0691	23884	5D4Ch	E	1	FIX32	VD	4	Ra/Wa	
C0692	23883	5D4Bh	E	1	FIX32	VD	4	Ra/Wa	
C0693	23882	5D4Ah	A	2	FIX32	VD	4	Ra/W	CINH
C0694	23881	5D49h	A	2	FIX32	VD	4	Ra	
C0695	23880	5D48h	E	1	FIX32	VD	4	Ra/Wa	
C0697	23878	5D46h	A	2	FIX32	VD	4	Ra/W	CINH
C0698	23877	5D45h	A	2	I32	VH	4	Ra	
C0700	23875	5D43h	E	1	FIX32	VD	4	Ra/W	CINH
C0701	23874	5D42h	E	1	FIX32	VD	4	Ra	
C0703	23872	5D40h	E	1	FIX32	VD	4	Ra/W	CINH

Configuration

Code	Index		Data					Access	
	dec	hex	DS	DA	DT	Format	DL	LCM-R/W	Condition
C0704	23871	5D3Fh	E	1	FIX32	VD	4	Ra	
C0710	23865	5D39h	E	1	FIX32	VD	4	Ra/Wa	
C0711	23864	5D38h	E	1	FIX32	VD	4	Ra/Wa	
C0713	23862	5D36h	E	1	FIX32	VD	4	Ra/W	CINH
C0714	23861	5D35h	E	1	FIX32	VD	4	Ra	
C0715	23860	5D34h	E	1	FIX32	VD	4	Ra/Wa	
C0716	23859	5D33h	E	1	FIX32	VD	4	Ra/Wa	
C0718	23857	5D31h	E	1	FIX32	VD	4	Ra/W	CINH
C0719	23856	5D30h	E	1	FIX32	VD	4	Ra	
C0720	23855	5D2Fh	E	1	FIX32	VD	4	Ra/Wa	
C0721	23854	5D2Eh	E	1	FIX32	VD	4	Ra/Wa	
C0723	23852	5D2Ch	E	1	FIX32	VD	4	Ra/W	CINH
C0724	23851	5D2Bh	E	1	FIX32	VD	4	Ra	
C0725	23850	5D2Ah	E	1	FIX32	VD	4	Ra/Wa	
C0726	23849	5D29h	E	1	FIX32	VD	4	Ra/Wa	
C0728	23847	5D27h	E	1	FIX32	VD	4	Ra/W	CINH
C0729	23846	5D26h	E	1	FIX32	VD	4	Ra	
C0750	23825	5D11h	E	1	FIX32	VD	4	Ra/Wa	
C0751	23824	5D10h	E	1	FIX32	VD	4	Ra/Wa	
C0752	23823	5D0Fh	E	1	FIX32	VD	4	Ra/Wa	
C0753	23822	5D0Eh	E	1	FIX32	VD	4	Ra/Wa	
C0754	23821	5D0Dh	E	1	U32	VH	4	Ra/Wa	
C0755	23820	5D0Ch	E	1	FIX32	VD	4	Ra/Wa	
C0756	23819	5D0Bh	E	1	I32	VH	4	Ra/Wa	
C0757	23818	5D0Ah	E	1	FIX32	VD	4	Ra/Wa	
C0758	23817	5D09h	E	1	FIX32	VD	4	Ra/W	CINH
C0759	23816	5D08h	E	1	FIX32	VD	4	Ra/W	CINH
C0760	23815	5D07h	E	1	FIX32	VD	4	Ra/W	CINH
C0761	23814	5D06h	E	1	FIX32	VD	4	Ra/W	CINH
C0764	23811	5D03h	A	3	FIX32	VD	4	Ra	
C0765	23810	5D02h	E	1	FIX32	VD	4	Ra	
C0766	23809	5D01h	E	1	FIX32	VD	4	Ra/Wa	
C0770	23805	5CFDh	E	1	FIX32	VD	4	Ra/W	CINH
C0771	23804	5CFCh	E	1	FIX32	VD	4	Ra/W	CINH
C0772	23803	5CFBh	E	1	FIX32	VD	4	Ra/W	CINH
C0773	23802	5CFAh	A	3	FIX32	VD	4	Ra	
C0775	23800	5CF8h	E	1	FIX32	VD	4	Ra/W	CINH
C0776	23799	5CF7h	E	1	FIX32	VD	4	Ra/W	CINH
C0777	23798	5CF6h	E	1	FIX32	VD	4	Ra/W	CINH
C0778	23797	5CF5h	A	3	FIX32	VD	4	Ra	
C0780	23795	5CF3h	E	1	FIX32	VD	4	Ra/W	CINH
C0781	23794	5CF2h	E	1	FIX32	VD	4	Ra/W	CINH
C0782	23793	5CF1h	E	1	FIX32	VD	4	Ra/W	CINH
C0783	23792	5CF0h	E	1	FIX32	VD	4	Ra/W	CINH
C0784	23791	5CEFh	E	1	FIX32	VD	4	Ra/W	CINH
C0785	23790	5CEEh	E	1	FIX32	VD	4	Ra/W	CINH
C0786	23789	5CEDh	E	1	FIX32	VD	4	Ra/W	CINH
C0787	23788	5CECh	A	4	FIX32	VD	4	Ra/W	CINH
C0788	23787	5CEBh	A	4	FIX32	VD	4	Ra/W	CINH
C0789	23786	5CEAh	E	1	FIX32	VD	4	Ra/W	CINH
C0790	23785	5CE9h	E	1	FIX32	VD	4	Ra/W	CINH
C0798	23777	5CE1h	A	2	FIX32	VD	4	Ra	

Code	Index		Data					Access	
	dec	hex	DS	DA	DT	Format	DL	LCM-R/W	Condition
C0799	23776	5CE0h	A	13	FIX32	VD	4	Ra	
C0800	23775	5CDFh	E	1	FIX32	VD	4	Ra/W	CINH
C0801	23774	5CDEh	E	1	FIX32	VD	4	Ra/W	CINH
C0802	23773	5CDDh	E	1	FIX32	VD	4	Ra/W	CINH
C0803	23772	5CDCh	E	1	FIX32	VD	4	Ra/W	CINH
C0804	23771	5CDBh	E	1	FIX32	VD	4	Ra/W	CINH
C0805	23770	5CDAh	E	1	FIX32	VD	4	Ra/W	CINH
C0808	23767	5CD7h	A	4	FIX32	VD	4	Ra	
C0809	23766	5CD6h	A	2	FIX32	VD	4	Ra	
C0810	23765	5CD5h	A	2	FIX32	VD	4	Ra/W	CINH
C0811	23764	5CD4h	E	1	FIX32	VD	4	Ra/W	CINH
C0812	23763	5CD3h	A	2	FIX32	VD	4	Ra	
C0813	23762	5CD2h	E	1	FIX32	VD	4	Ra	
C0815	23760	5CD0h	A	2	FIX32	VD	4	Ra/W	CINH
C0816	23759	5CCFh	E	1	FIX32	VD	4	Ra/W	CINH
C0817	23758	5CCEh	A	2	FIX32	VD	4	Ra	
C0818	23757	5CCDh	E	1	FIX32	VD	4	Ra	
C0820	23755	5CCBh	A	3	FIX32	VD	4	Ra/W	CINH
C0821	23754	5CCAh	A	3	FIX32	VD	4	Ra	
C0822	23753	5CC9h	A	3	FIX32	VD	4	Ra/W	CINH
C0823	23752	5CC8h	A	3	FIX32	VD	4	Ra	
C0824	23751	5CC7h	A	3	FIX32	VD	4	Ra/W	CINH
C0825	23750	5CC6h	A	3	FIX32	VD	4	Ra	
C0826	23749	5CC5h	A	3	FIX32	VD	4	Ra/W	CINH
C0827	23748	5CC4h	A	3	FIX32	VD	4	Ra	
C0828	23747	5CC3h	A	3	FIX32	VD	4	Ra/W	CINH
C0829	23746	5CC2h	A	3	FIX32	VD	4	Ra	
C0830	23745	5CC1h	A	3	FIX32	VD	4	Ra/W	CINH
C0831	23744	5CC0h	A	3	FIX32	VD	4	Ra	
C0832	23743	5CBFh	A	3	FIX32	VD	4	Ra/W	CINH
C0833	23742	5CBEh	A	3	FIX32	VD	4	Ra	
C0834	23741	5CBDh	A	3	FIX32	VD	4	Ra/W	CINH
C0835	23740	5CBCh	A	3	FIX32	VD	4	Ra	
C0836	23739	5CBBh	A	3	FIX32	VD	4	Ra/W	CINH
C0837	23738	5CBAh	A	3	FIX32	VD	4	Ra	
C0838	23737	5CB9h	A	3	FIX32	VD	4	Ra/W	CINH
C0839	23736	5CB8h	A	3	FIX32	VD	4	Ra	
C0840	23735	5CB7h	E	1	FIX32	VD	4	Ra/W	CINH
C0841	23734	5CB6h	E	1	FIX32	VD	4	Ra	
C0842	23733	5CB5h	E	1	FIX32	VD	4	Ra/W	CINH
C0843	23732	5CB4h	E	1	FIX32	VD	4	Ra	
C0844	23731	5CB3h	E	1	FIX32	VD	4	Ra/W	CINH
C0845	23730	5CB2h	E	1	FIX32	VD	4	Ra	
C0846	23729	5CB1h	E	1	FIX32	VD	4	Ra/W	CINH
C0847	23728	5CB0h	E	1	FIX32	VD	4	Ra	
C0848	23727	5CAFh	E	1	FIX32	VD	4	Ra/W	CINH
C0849	23726	5CAEh	E	1	FIX32	VD	4	Ra	
C0850	23725	5CADh	A	3	FIX32	VD	4	Ra/W	CINH
C0851	23724	5CACh	E	1	FIX32	VD	4	Ra/W	CINH
C0852	23723	5CABh	E	1	FIX32	VD	4	Ra/Wa	
C0853	23722	5CAAh	E	1	FIX32	VD	4	Ra/Wa	
C0854	23721	5CA9h	E	1	FIX32	VD	4	Ra/Wa	

Configuration

Code	Index		Data					Access	
	dec	hex	DS	DA	DT	Format	DL	LCM-R/W	Condition
C0855	23720	5CA8h	A	2	B16	VH	2	Ra	
C0856	23719	5CA7h	A	3	I32	VH	4	Ra	
C0857	23718	5CA6h	E	1	I32	VH	4	Ra	
C0858	23717	5CA5h	A	3	I32	VH	4	Ra	
C0859	23716	5CA4h	E	1	I32	VH	4	Ra	
C0860	23715	5CA3h	A	11	FIX32	VD	4	Ra/W	CINH
C0861	23714	5CA2h	A	3	FIX32	VD	4	Ra/W	CINH
C0863	23712	5CA0h	A	6	B16	VH	2	Ra	
C0864	23711	5C9Fh	A	3	FIX32	VD	4	Ra/Wa	
C0865	23710	5C9Eh	A	3	FIX32	VD	4	Ra/Wa	
C0866	23709	5C9Dh	A	11	FIX32	VD	4	Ra	
C0867	23708	5C9Ch	A	3	I32	VH	4	Ra	
C0868	23707	5C9Bh	A	11	FIX32	VD	4	Ra	
C0869	23706	5C9Ah	A	3	I32	VH	4	Ra	
C0870	23705	5C99h	A	2	FIX32	VD	4	Ra/W	CINH
C0871	23704	5C98h	E	1	FIX32	VD	4	Ra/W	CINH
C0876	23699	5C93h	E	1	FIX32	VD	4	Ra/W	CINH
C0878	23697	5C91h	A	4	FIX32	VD	4	Ra	
C0879	23696	5C90h	A	3	FIX32	VD	4	Ra/Wa	
C0880	23695	5C8Fh	A	2	FIX32	VD	4	Ra/W	CINH
C0881	23694	5C8Eh	E	1	FIX32	VD	4	Ra/W	CINH
C0884	23691	5C8Bh	A	3	FIX32	VD	4	Ra	
C0885	23690	5C8Ah	E	1	FIX32	VD	4	Ra/W	CINH
C0886	23689	5C89h	E	1	FIX32	VD	4	Ra/W	CINH
C0889	23686	5C86h	A	2	FIX32	VD	4	Ra	
C0890	23685	5C85h	E	1	FIX32	VD	4	Ra/W	CINH
C0891	23684	5C84h	E	1	FIX32	VD	4	Ra/W	CINH
C0892	23683	5C83h	E	1	FIX32	VD	4	Ra/W	CINH
C0893	23682	5C82h	E	1	FIX32	VD	4	Ra/W	CINH
C0894	23681	5C81h	E	1	FIX32	VD	4	Ra/W	CINH
C0895	23680	5C80h	E	1	FIX32	VD	4	Ra/W	CINH
C0896	23679	5C7Fh	E	1	FIX32	VD	4	Ra/W	CINH
C0897	23678	5C7Eh	E	1	FIX32	VD	4	Ra/W	CINH
C0898	23677	5C7Dh	E	1	FIX32	VD	4	Ra/W	CINH
C0899	23676	5C7Ch	E	1	FIX32	VD	4	Ra/W	CINH
C0900	23675	5C7Bh	E	1	FIX32	VD	4	Ra/W	CINH
C0901	23674	5C7Ah	E	1	FIX32	VD	4	Ra/W	CINH
C0902	23673	5C79h	E	1	FIX32	VD	4	Ra/W	CINH
C0903	23672	5C78h	E	1	FIX32	VD	4	Ra/W	CINH
C0906	23669	5C75h	A	9	FIX32	VD	4	Ra	
C0907	23668	5C74h	A	4	FIX32	VD	4	Ra	
C0908	23667	5C73h	E	1	I32	VH	4	Ra	
C0909	23666	5C72h	E	1	FIX32	VD	4	Ra/Wa	
C0920	23655	5C67h	E	1	FIX32	VD	4	Ra/W	CINH
C0921	23654	5C66h	E	1	FIX32	VD	4	Ra/W	CINH
C0922	23653	5C65h	E	1	FIX32	VD	4	Ra/W	CINH
C0923	23652	5C64h	E	1	FIX32	VD	4	Ra/W	CINH
C0924	23651	5C63h	E	1	FIX32	VD	4	Ra/W	CINH
C0925	23650	5C62h	E	1	FIX32	VD	4	Ra/W	CINH
C0926	23649	5C61h	A	4	I32	VH	4	Ra	
C0927	23648	5C60h	A	3	FIX32	VD	4	Ra	
C0928	23647	5C5Fh	E	1	I32	VH	4	Ra	

Code	Index		Data					Access	
	dec	hex	DS	DA	DT	Format	DL	LCM-R/W	Condition
C0929	23646	5C5Eh	E	1	FIX32	VD	4	Ra	
C0930	23645	5C5Dh	E	1	FIX32	VD	4	Ra/W	CINH
C0931	23644	5C5Ch	E	1	FIX32	VD	4	Ra/W	CINH
C0932	23643	5C5Bh	E	1	FIX32	VD	4	Ra/Wa	
C0933	23642	5C5Ah	E	1	FIX32	VD	4	Ra/Wa	
C0934	23641	5C59h	E	1	I32	VH	4	Ra/Wa	
C0935	23640	5C58h	E	1	FIX32	VD	4	Ra/Wa	
C0936	23639	5C57h	E	1	FIX32	VD	4	Ra/Wa	
C0940	23635	5C53h	E	1	FIX32	VD	4	Ra/Wa	
C0941	23634	5C52h	E	1	FIX32	VD	4	Ra/Wa	
C0942	23633	5C51h	E	1	FIX32	VD	4	Ra/W	CINH
C0943	23632	5C50h	E	1	FIX32	VD	4	Ra	
C0945	23630	5C4Eh	E	1	FIX32	VD	4	Ra/Wa	
C0946	23629	5C4Dh	E	1	FIX32	VD	4	Ra/Wa	
C0947	23628	5C4Ch	E	1	FIX32	VD	4	Ra/W	CINH
C0948	23627	5C4Bh	E	1	FIX32	VD	4	Ra	
C0950	23625	5C49h	E	1	FIX32	VD	4	Ra/Wa	
C0951	23624	5C48h	E	1	FIX32	VD	4	Ra/Wa	
C0952	23623	5C47h	E	1	FIX32	VD	4	Ra/W	CINH
C0953	23622	5C46h	E	1	FIX32	VD	4	Ra	
C0955	23620	5C44h	E	1	FIX32	VD	4	Ra/Wa	
C0956	23619	5C43h	E	1	FIX32	VD	4	Ra/Wa	
C0957	23618	5C42h	E	1	FIX32	VD	4	Ra/W	CINH
C0958	23617	5C41h	E	1	FIX32	VD	4	Ra	
C0960	23615	5C3Fh	E	1	FIX32	VD	4	Ra/Wa	
C0961	23614	5C3Eh	E	1	FIX32	VD	4	Ra/Wa	
C0962	23613	5C3Dh	E	1	FIX32	VD	4	Ra/Wa	
C0963	23612	5C3Ch	E	1	FIX32	VD	4	Ra/Wa	
C0964	23611	5C3Bh	E	1	FIX32	VD	4	Ra/Wa	
C0965	23610	5C3Ah	E	1	FIX32	VD	4	Ra/Wa	
C0966	23609	5C39h	E	1	FIX32	VD	4	Ra/Wa	
C0967	23608	5C38h	E	1	FIX32	VD	4	Ra/W	CINH
C0968	23607	5C37h	E	1	FIX32	VD	4	Ra	
C0970	23605	5C35h	E	1	FIX32	VD	4	Ra/W	CINH
C0971	23604	5C34h	E	1	FIX32	VD	4	Ra/W	CINH
C0972	23603	5C33h	E	1	FIX32	VD	4	Ra/W	CINH
C0973	23602	5C32h	E	1	FIX32	VD	4	Ra/W	CINH
C0974	23601	5C31h	E	1	FIX32	VD	4	Ra/W	CINH
C0975	23600	5C30h	E	1	FIX32	VD	4	Ra/W	CINH
C0976	23599	5C2Fh	E	1	FIX32	VD	4	Ra/W	CINH
C0977	23598	5C2Eh	E	1	FIX32	VD	4	Ra/W	CINH
C0978	23597	5C2Dh	E	1	FIX32	VD	4	Ra/W	CINH
C0980	23595	5C2Bh	E	1	FIX32	VD	4	Ra/Wa	
C0981	23594	5C2Ah	E	1	FIX32	VD	4	Ra/Wa	
C0982	23593	5C29h	E	1	FIX32	VD	4	Ra/Wa	
C0983	23592	5C28h	E	1	FIX32	VD	4	Ra/Wa	
C0988	23587	5C23h	A	7	FIX32	VD	4	Ra	
C0989	23586	5C22h	A	2	FIX32	VD	4	Ra	
C0990	23585	5C21h	E	1	FIX32	VD	4	Ra/W	CINH
C0991	23584	5C20h	E	1	FIX32	VD	4	Ra/W	CINH
C0992	23583	5C1Fh	E	1	FIX32	VD	4	Ra	
C0993	23582	5C1Eh	E	1	FIX32	VD	4	Ra	

Configuration

Code	Index		Data					Access	
	dec	hex	DS	DA	DT	Format	DL	LCM-R/W	Condition
C0995	23580	5C1Ch	E	1	FIX32	VD	4	Ra/Wa	
C0996	23579	5C1Bh	E	1	FIX32	VD	4	Ra/W	CINH
C0997	23578	5C1Ah	E	1	I32	VH	4	Ra	
C1000	23575	5C17h	E	1	FIX32	VD	4	Ra/Wa	
C1001	23574	5C16h	E	1	FIX32	VD	4	Ra/W	CINH
C1002	23573	5C15h	E	1	I32	VH	4	Ra	
C1010	23565	5C0Dh	E	1	FIX32	VD	4	Ra/Wa	
C1011	23564	5C0Ch	A	2	FIX32	VD	4	Ra/W	CINH
C1012	23563	5C0Bh	A	2	I32	VH	4	Ra	
C1030	23545	5BF9h	E	1	FIX32	VD	4	Ra/W	CINH
C1031	23544	5BF8h	E	1	FIX32	VD	4	Ra/W	CINH
C1032	23543	5BF7h	E	1	FIX32	VD	4	Ra	
C1033	23542	5BF6h	E	1	FIX32	VD	4	Ra	
C1040	23535	5BEFh	E	1	FIX32	VD	4	Ra/Wa	
C1041	23534	5BEEh	E	1	FIX32	VD	4	Ra/Wa	
C1042	23533	5BEDh	E	1	FIX32	VD	4	Ra/W	CINH
C1043	23532	5BECh	E	1	FIX32	VD	4	Ra/W	CINH
C1044	23531	5BEBh	E	1	FIX32	VD	4	Ra/W	CINH
C1045	23530	5BEAh	A	2	FIX32	VD	4	Ra	
C1046	23529	5BE9h	E	1	FIX32	VD	4	Ra	
C1090	23485	5BBDh	E	1	I32	VH	4	Ra	
C1091	23484	5BBCh	E	1	FIX32	VD	4	Ra/Wa	
C1092	23483	5BBBh	E	1	FIX32	VD	4	Ra/Wa	
C1093	23482	5BBAh	E	1	FIX32	VD	4	Ra/Wa	
C1094	23481	5BB9h	E	1	FIX32	VD	4	Ra/Wa	
C1095	23480	5BB8h	E	1	I32	VH	4	Ra/Wa	
C1096	23479	5BB7h	E	1	FIX32	VD	4	Ra/W	CINH
C1097	23478	5BB6h	E	1	FIX32	VD	4	Ra/W	CINH
C1098	23477	5BB5h	E	1	FIX32	VD	4	Ra	
C1099	23476	5BB4h	E	1	FIX32	VD	4	Ra	
C1100	23475	5BB3h	E	1	FIX32	VD	4	Ra/Wa	
C1101	23474	5BB2h	A	2	FIX32	VD	4	Ra/W	CINH
C1102	23473	5BB1h	A	3	FIX32	VD	4	Ra/W	CINH
C1103	23472	5BB0h	A	2	FIX32	VD	4	Ra	
C1104	23471	5BAFh	A	3	FIX32	VD	4	Ra	
C1120	23455	5B9Fh	E	1	FIX32	VD	4	Ra/Wa	
C1121	23454	5B9Eh	A	2	FIX32	VD	4	Ra/Wa	
C1122	23453	5B9Dh	E	1	FIX32	VD	4	Ra/Wa	
C1123	23452	5B9Ch	A	2	FIX32	VD	4	Ra/Wa	
C1124	23451	5B9Bh	E	1	FIX32	VD	4	Ra/W	CINH
C1125	23450	5B9Ah	E	1	FIX32	VD	4	Ra/W	CINH
C1126	23449	5B99h	E	1	FIX32	VD	4	Ra/W	CINH
C1127	23448	5B98h	E	1	I32	VH	4	Ra	
C1128	23447	5B97h	E	1	I32	VH	4	Ra	
C1129	23446	5B96h	E	1	I32	VH	4	Ra	
C1140	23435	5B8Bh	E	1	FIX32	VD	4	Ra/Wa	
C1141	23434	5B8Ah	E	1	FIX32	VD	4	Ra/Wa	
C1143	23432	5B88h	E	1	FIX32	VD	4	Ra/W	CINH
C1144	23431	5B87h	E	1	FIX32	VD	4	Ra	
C1145	23430	5B86h	E	1	FIX32	VD	4	Ra/Wa	
C1146	23429	5B85h	E	1	FIX32	VD	4	Ra/Wa	
C1148	23427	5B83h	E	1	FIX32	VD	4	Ra/W	CINH

Code	Index		Data					Access	
	dec	hex	DS	DA	DT	Format	DL	LCM-R/W	Condition
C1149	23426	5B82h	E	1	FIX32	VD	4	Ra	
C1150	23425	5B81h	E	1	FIX32	VD	4	Ra/Wa	
C1151	23424	5B80h	E	1	I32	VH	4	Ra/Wa	
C1153	23422	5B7Eh	E	1	FIX32	VD	4	Ra/W	CINH
C1154	23421	5B7Dh	E	1	FIX32	VD	4	Ra/W	CINH
C1155	23420	5B7Ch	E	1	FIX32	VD	4	Ra/W	CINH
C1157	23418	5B7Ah	E	1	FIX32	VD	4	Ra	
C1158	23417	5B79h	E	1	FIX32	VD	4	Ra	
C1159	23416	5B78h	E	1	I32	VH	4	Ra	
C1160	23415	5B77h	A	2	FIX32	VD	4	Ra/W	CINH
C1161	23414	5B76h	E	1	FIX32	VD	4	Ra/W	CINH
C1162	23413	5B75h	A	2	FIX32	VD	4	Ra	
C1163	23412	5B74h	E	1	FIX32	VD	4	Ra	
C1165	23410	5B72h	A	2	FIX32	VD	4	Ra/W	CINH
C1166	23409	5B71h	E	1	FIX32	VD	4	Ra/W	CINH
C1167	23408	5B70h	A	2	FIX32	VD	4	Ra	
C1168	23407	5B6Fh	E	1	FIX32	VD	4	Ra	
C1170	23405	5B6Dh	E	1	FIX32	VD	4	Ra/Wa	
C1171	23404	5B6Ch	E	1	FIX32	VD	4	Ra/Wa	
C1172	23403	5B6Bh	E	1	FIX32	VD	4	Ra/W	CINH
C1173	23402	5B6Ah	E	1	FIX32	VD	4	Ra	
C1175	23400	5B68h	A	3	FIX32	VD	4	Ra/W	CINH
C1176	23399	5B67h	A	3	FIX32	VD	4	Ra	
C1178	23397	5B65h	A	3	FIX32	VD	4	Ra/W	CINH
C1179	23396	5B64h	A	3	FIX32	VD	4	Ra	
C1190	23385	5B59h	E	1	FIX32	VD	4	Ra/Wa	
C1191	23384	5B58h	A	2	FIX32	VD	4	Ra/Wa	
C1192	23383	5B57h	A	2	FIX32	VD	4	Ra/Wa	
C1195	23380	5B54h	E	1	FIX32	VD	4	Ra/W	CINH
C1196	23379	5B53h	E	1	I32	VH	4	Ra	
C1197	23378	5B52h	E	1	I32	VH	4	Ra	
C1200	23375	5B4Fh	A	3	FIX32	VD	4	Ra/W	CINH
C1201	23374	5B4Eh	A	3	I32	VH	4	Ra	
C1205	23370	5B4Ah	A	2	FIX32	VD	4	Ra/W	CINH
C1206	23369	5B49h	A	2	I32	VH	4	Ra	
C1207	23368	5B48h	E	1	FIX32	VD	4	Ra/Wa	
C1210	23365	5B45h	A	5	FIX32	VD	4	Ra/W	CINH
C1211	23364	5B44h	A	2	FIX32	VD	4	Ra/W	CINH
C1212	23363	5B43h	E	1	FIX32	VD	4	Ra/W	CINH
C1215	23360	5B40h	A	5	FIX32	VD	4	Ra	
C1216	23359	5B3Fh	A	2	FIX32	VD	4	Ra	
C1217	23358	5B3Eh	E	1	I32	VH	4	Ra	
C1220	23355	5B3Bh	A	2	FIX32	VD	4	Ra/W	CINH
C1223	23352	5B38h	A	2	FIX32	VD	4	Ra	
C1230	23345	5B31h	A	2	FIX32	VD	4	Ra/W	CINH
C1231	23344	5B30h	E	1	FIX32	VD	4	Ra/W	CINH
C1232	23343	5B2Fh	A	2	FIX32	VD	4	Ra/W	CINH
C1235	23340	5B2Ch	A	2	FIX32	VD	4	Ra	
C1236	23339	5B2Bh	E	1	FIX32	VD	4	Ra	
C1237	23338	5B2Ah	A	2	I32	VH	4	Ra	
C1240	23335	5B27h	A	2	FIX32	VD	4	Ra/W	CINH
C1241	23334	5B26h	E	1	FIX32	VD	4	Ra/W	CINH

Configuration

Code	Index		Data					Access	
	dec	hex	DS	DA	DT	Format	DL	LCM-R/W	Condition
C1242	23333	5B25h	E	1	FIX32	VD	4	Ra/W	CINH
C1245	23330	5B22h	A	2	FIX32	VD	4	Ra	
C1246	23329	5B21h	E	1	FIX32	VD	4	Ra	
C1247	23328	5B20h	E	1	I32	VH	4	Ra	
C1250	23325	5B1Dh	E	1	FIX32	VD	4	Ra/W	CINH
C1251	23324	5B1Ch	A	2	FIX32	VD	4	Ra/W	CINH
C1253	23322	5B1Ah	E	1	FIX32	VD	4	Ra	
C1254	23321	5B19h	A	2	I32	VH	4	Ra	
C1255	23320	5B18h	E	1	FIX32	VD	4	Ra/W	CINH
C1258	23317	5B15h	E	1	FIX32	VD	4	Ra	
C1260	23315	5B13h	E	1	FIX32	VD	4	Ra/W	CINH
C1261	23314	5B12h	E	1	FIX32	VD	4	Ra/W	CINH
C1262	23313	5B11h	E	1	FIX32	VD	4	Ra/W	CINH
C1265	23310	5B0Eh	E	1	FIX32	VD	4	Ra/W	CINH
C1266	23309	5B0Dh	E	1	FIX32	VD	4	Ra/W	CINH
C1268	23307	5B0Bh	E	1	FIX32	VD	4	Ra	
C1269	23306	5B0Ah	E	1	I32	VH	4	Ra	
C1270	23305	5B09h	A	2	FIX32	VD	4	Ra/W	CINH
C1271	23304	5B08h	A	2	I32	VH	4	Ra	
C1272	23303	5B07h	E	1	FIX32	VD	4	Ra/Wa	
C1290	23285	5AF5h	E	1	FIX32	VD	4	Ra/Wa	
C1500	23075	5A23h	E	1	I32	VH	4	Ra	
C1501	23074	5A22h	E	1	FIX32	VD	4	Ra/Wa	
C1502	23073	5A21h	E	1	FIX32	VD	4	Ra/Wa	
C1503	23072	5A20h	E	1	FIX32	VD	4	Ra/Wa	
C1504	23071	5A1Fh	E	1	FIX32	VD	4	Ra/Wa	
C1505	23070	5A1Eh	E	1	I32	VH	4	Ra/Wa	
C1506	23069	5A1Dh	E	1	FIX32	VD	4	Ra/W	CINH
C1507	23068	5A1Ch	E	1	FIX32	VD	4	Ra/W	CINH
C1508	23067	5A1Bh	E	1	FIX32	VD	4	Ra	
C1509	23066	5A1Ah	E	1	FIX32	VD	4	Ra	
C1799	22776	58F8h	E	1	FIX32	VD	4	Ra/Wa	

7.12 Selection list - motors

Note!

For the parameter setting of the drive the available motor type is to be entered under code C0086. In future, this value will be indicated on the nameplate.
Example: “161”. Indicates the motor designation ”DSKS56-33-200” in the display.

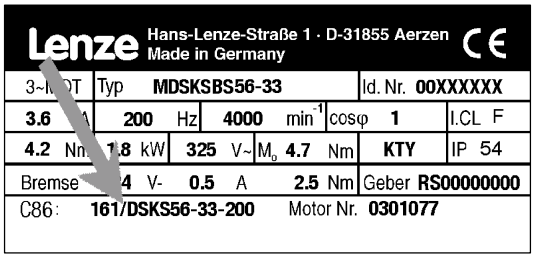

C0086 Value	Name	Lenze motor type	C0081 P_r [kW]	C0087 n_r [rpm]	C0088 I_r [A]	C0089 f_r [Hz]	C0090 V_r [V]	Motor type	Temperature sensor
10	MDSKA56-140	MDSKAXX056-22	0.80	3950	2.4	140	390	Asynchronous servo motor	KTY
11	MDFKA71-120	MDFKAXX071-22	2.20	3410	6.0	120			
12	MDSKA71-140	MDSKAXX071-22	1.70	4050	4.4	140			
13	MDFKA80-60	MDFKAXX080-22	2.10	1635	4.8	60			
14	MDSKA80-70	MDSKAXX080-22	1.40	2000	3.3	70			
15	MDFKA80-120	MDFKAXX080-22	3.90	3455	9.1	120			
16	MDSKA80-140	MDSKAXX080-22	2.30	4100	5.8	140			
17	MDFKA90-60	MDFKAXX090-22	3.80	1680	8.5	60			
18	MDSKA90-80	MDSKAXX090-22	2.60	2300	5.5	80			
19	MDFKA90-120	MDFKAXX090-22	6.90	3480	15.8	120			
20	MDSKA90-140	MDSKAXX090-22	4.10	4110	10.2	140	350		
21	MDFKA100-60	MDFKAXX100-22	6.40	1700	13.9	60	390		
22	MDSKA100-80	MDSKAXX100-22	4.00	2340	8.2	80			
23	MDFKA100-120	MDFKAXX100-22	13.20	3510	28.7	120			
24	MDSKA100-140	MDSKAXX100-22	5.20	4150	14.0	140	330		
25	MDFKA112-60	MDFKAXX112-22	11.00	1710	22.5	60	390		
26	MDSKA112-85	MDSKAXX112-22	6.40	2490	13.5	85			
27	MDFKA112-120	MDFKAXX112-22	20.30	3520	42.5	120			
28	MDSKA112-140	MDSKAXX112-22	7.40	4160	19.8	140	320		
30	DFQA100-50	MDFQAXX100-22	10.60	1420	26.5	50	360		
31	DFQA100-100	MDFQAXX100-22	20.30	2930	46.9	100			
32	DFQA112-28	MDFQAXX112-22	11.50	760	27.2	28			
33	DFQA112-58	MDFQAXX112-22	22.70	1670	49.1	58			
34	DFQA132-20	MDFQAXX132-32	17.00	550	45.2	20			
35	DFQA132-42	MDFQAXX132-32	40.30	1200	88.8	42			
40	DFQA112-50	MDFQAXX112-22	20.10	1425	43.7	50			
41	DFQA112-100	MDFQAXX112-22	38.40	2935	81.9	100			
42	DFQA132-36	MDFQAXX132-32	36.40	1030	77.4	39			
43	DFQA132-76	MDFQAXX132-32	60.10	2235	144.8	76	340		

Configuration

C0086 Value	C0086 Name	Lenze motor type	C0081 P_r [kW]	C0087 n_r [rpm]	C0088 I_r [A]	C0089 f_r [Hz]	C0090 V_r [V]	Motor type	Temperature sensor
50	DSVA56-140	DSVAXX056-22	0.80	3950	2.4	140	390	Asynchronous servo motor	TKO (Thermal contact)
51	DFVA71-120	DFVAXX071-22	2.20	3410	6.0	120			
52	DSVA71-140	DSVAXX071-22	1.70	4050	4.4	140			
53	DFVA80-60	DFVAXX080-22	2.10	1635	4.8	60			
54	DSVA80-70	DSVAXX080-22	1.40	2000	3.3	70			
55	DFVA80-120	DFVAXX080-22	3.90	3455	9.1	120			
56	DSVA80-140	DSVAXX080-22	2.30	4100	5.8	140			
57	DFVA90-60	DFVAXX090-22	3.80	1680	8.5	60			
58	DSVA90-80	DSVAXX090-22	2.60	2300	5.5	80			
59	DFVA90-120	DFVAXX090-22	6.90	3480	15.8	120			
60	DSVA90-140	DSVAXX090-22	4.10	4110	10.2	140	350		
61	DFVA100-60	DFVAXX100-22	6.40	1700	13.9	60	390		
62	DSVA100-80	DSVAXX100-22	4.00	2340	8.2	80			
63	DFVA100-120	DFVAXX100-22	13.20	3510	28.7	120			
64	DSVA100-140	DSVAXX100-22	5.20	4150	14.0	140	330		
65	DFVA112-60	DFVAXX112-22	11.00	1710	22.5	60	390		
66	DSVA112-85	DSVAXX112-22	6.40	2490	13.5	85			
67	DFVA112-120	DFVAXX112-22	20.30	3520	42.5	120			
68	DSVA112-140	DSVAXX112-22	7.40	4160	19.8	140	320		
108	DSKS36-13-200	MDSKSXX036-13	0.25	4000	0.9	200	245	Synchronous servo motor	KTY
109	DSKS36-23-200	MDSKSXX036-23	0.54	4000	1.1	200	345		
110	MDSKS56-23-150	MDSKSXX056-23	0.60	3000	1.25	150	350		
111	MDSKS56-33-150	MDSKSXX056-33	0.91	3000	2.0	150	340		
112	MDSKS71-13-150	MDSKSXX071-13	1.57	3000	3.1	150	360		
113	MDFKS71-13-150	MDFKSXX071-13	2.29	3000	4.35	150	385		
114	MDSKS71-23-150	MDSKSXX071-23	2.33	3000	4.85	150	360		
115	MDFKS71-23-150	MDFKSXX071-23	3.14	3000	6.25	150	375		
116	MDSKS71-33-150	MDSKSXX071-33	3.11	3000	6.7	150	330		
117	MDFKS71-33-150	MDFKSXX071-33	4.24	3000	9.1	150	345		
160	DSKS56-23-190	MDSKSXX056-23	1.1	3800	2.3	190	330		
161	DSKS56-33-200	MDSKSXX056-33	1.8	4000	3.6	200	325		
162	DSKS71-03-170	MDSKSXX071-03	2.0	3400	4.2	170	330		
163	DFKS71-03-165	MDFKSXX071-03	2.6	3300	5.6	165	330		
164	DSKS71-13-185	MDSKSXX071-13	3.2	3700	7.0	185	325		
165	DFKS71-13-180	MDFKSXX071-13	4.1	3600	9.2	180	325		
166	DSKS71-33-180	MDSKSXX071-33	4.6	3600	10.0	180	325		
167	DFKS71-33-175	MDFKSXX071-33	5.9	3500	13.1	175	325		

C0086 Value	C0086 Name	Lenze motor type	C0081 P_r [kW]	C0087 n_r [rpm]	C0088 I_r [A]	C0089 f_r [Hz]	C0090 V_r [V]	Motor type	Temperature sensor
210	DXRAXX071-12-50	DXRAXX071-12	0.25	1410	0.9	50	400	Asynchronous inverter motor (in star connection)	TKO (Thermal contact)
211	DXRAXX071-22-50	DXRAXX071-22	0.37	1398	1.2				
212	DXRAXX080-12-50	DXRAXX080-12	0.55	1400	1.7				
213	DXRAXX080-22-50	DXRAXX080-22	0.75	1410	2.3				
214	DXRAXX090-12-50	DXRAXX090-12	1.10	1420	2.7				
215	DXRAXX090-32-50	DXRAXX090-32	1.50	1415	3.6				
216	DXRAXX100-22-50	DXRAXX100-22	2.20	1425	4.8				
217	DXRAXX100-32-50	DXRAXX100-32	3.00	1415	6.6				
218	DXRAXX112-12-50	DXRAXX112-12	4.00	1435	8.3				
219	DXRAXX132-12-50	DXRAXX132-12	5.50	1450	11.0				
220	DXRAXX132-22-50	DXRAXX132-22	7.50	1450	14.6				
221	DXRAXX160-12-50	DXRAXX160-12	11.00	1460	21.0				
222	DXRAXX160-22-50	DXRAXX160-22	15.00	1460	27.8				
223	DXRAXX180-12-50	DXRAXX180-12	18.50	1470	32.8				
224	DXRAXX180-22-50	DXRAXX180-22	22.00	1456	38.8				
225	30kW-ASM-50	-	30.00	1470	52.0				–
226	37kW-ASM-50	-	37.00	1470	66.0				
227	45kW-ASM-50	-	45.00	1480	82.0				
228	55kW-ASM-50	-	55.00	1480	93.0				
229	75kW-ASM-50	-	75.00	1480	132.0				
250	DXRAXX071-12-87	DXRAXX071-12	0.43	2525	1.5	87	400	Asynchronous inverter motor (in delta connection)	TKO (Thermal contact)
251	DXRAXX071-22-87	DXRAXX071-22	0.64	2515	2.0				
252	DXRAXX080-12-87	DXRAXX080-12	0.95	2515	2.9				
253	DXRAXX080-22-87	DXRAXX080-22	1.3	2525	4.0				
254	DXRAXX090-12-87	DXRAXX090-12	2.0	2535	4.7				
255	DXRAXX090-32-87	DXRAXX090-32	2.7	2530	6.2				
256	DXRAXX100-22-87	DXRAXX100-22	3.9	2535	8.3				
257	DXRAXX100-32-87	DXRAXX100-32	5.35	2530	11.4				
258	DXRAXX112-12-87	DXRAXX112-12	7.10	2545	14.3				
259	DXRAXX132-12-87	DXRAXX132-12	9.7	2555	19.1				
260	DXRAXX132-22-87	DXRAXX132-22	13.2	2555	25.4				
261	DXRAXX160-12-87	DXRAXX160-12	19.3	2565	36.5				
262	DXRAXX160-22-87	DXRAXX160-22	26.4	2565	48.4				
263	DXRAXX180-12-87	DXRAXX180-12	32.4	2575	57.8				
264	DXRAXX180-22-87	DXRAXX180-22	38.7	2560	67.4				
265	30kW-ASM-50	-	52.00	2546	90.0				–
266	37kW-ASM-50	-	64.00	2546	114.0				
267	45kW-ASM-50	-	78.00	2563	142.0				
268	55kW-ASM-50	-	95.00	2563	161.0				
269	75kW-ASM-50	-	130.00	2563	228.0				

Configuration

Show/Hide Bookmarks

EDS9300-RE
00412734

Lenze

Manual
Part E

Troubleshooting and fault elimination

Maintenance

Global Drive

Servo register controller 9300

This documentation is valid for the servo register controllers 9300 as of version:

33.932X	ER	2G	1x	(9321 - 9329)
33.933X	ER	2G	1x	(9330 - 9332)
33.932X	CR	2G	1x	Cold Plate (9321 - 9328)

Type

Desgin:
E = Enclosure IP20
C = Cold Plate
xK = Cam profiler
xP = Position controller
xR = Register controller
xS = Servo inverter

Hardware level and index

Software level and index

Variant

Explanation

© 1999 Lenze GmbH & Co KG

Without written approval of Lenze Lenze GmbH & Co KG no part of these Instructions must be copied or given to third parties.

All indications given in these Operating instructions have been selected carefully and comply with the hardware and software described. Nevertheless, deviations cannot be ruled out. We do not take any responsibility or liability for damages which might possibly occur. Required corrections will be made in the following editions.

Version 1.0 12/99

Contents

Part E

8 Troubleshooting and fault elimination 8-1

8.1 Troubleshooting 8-1

8.2 Fault analysis with the history buffer 8-3

8.2.1 Structure of the history buffer 8-3

8.2.2 Working with the history buffer 8-4

8.3 Fault messages 8-6

8.4 Reset of fault messages 8-10

9 Maintenance 9-1

Contents

8 Troubleshooting and fault elimination

- Operational faults are indicated immediately via the display elements or the status information (📖 8-1, chapter “Troubleshooting”).
- Faults can be analysed using
  – the history bufferr (📖 8-3)
  – and the list “Fault messages”. (📖 8-6)
- The list “Fault messages” gives information on how to eliminate faults. (📖 8-6)

8.1 Troubleshooting

Display on the controller

Two LEDs on the front of the controller indicate the controller status.

LED green	LED red	Cause	Check
■	□	Controller enabled; no fault	
★	□	Controller inhibit, switch-on inhibit	C0183; or C0168/1
□	★	Fail	C0168/1
■	★	Warning, fail-QSP	C0168/1

■ : on □ : off ★ : blinking

Display in Global Drive Control

- Open the ”Dialog Diagnosis” menu in the parameter menu by a double click.

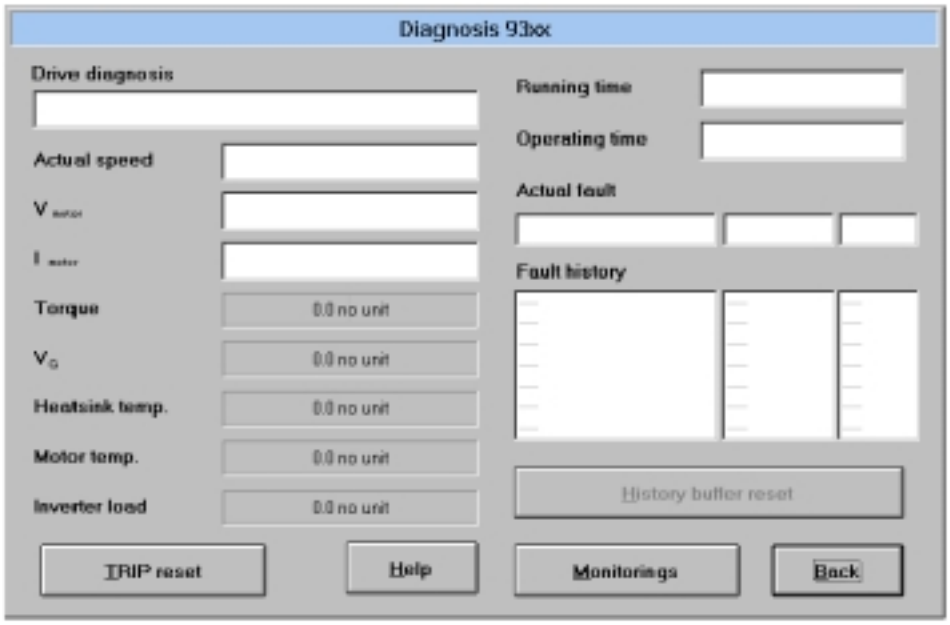

Fig. 8-1 Dialog box ”Diagnostics 9300”

- The dialog box ”Diagnosis 9300” indicates the controller status.

Troubleshooting and fault elimination

Display at the operating module

Status indications in the display indicate the controller status.

Display	Controller status	Check
RDY	Controller ready for operation, controller can be inhibited	C0183, C0168/1
IMP	Pulses at the power stage inhibited	C0183, C0168/1
I_{max}	Max. current reached	
M_{max}	Max. torque reached	
Fail	Fault through TRIP, message, fail-QSP or warning	C0183, C0168/1

Display via the LECOM status word C0150

Bit	Meaning	
0	FREE 0	freely linkable
1	IMP (pulse inhibit)	0 = enable pulses for power stage 1 = inhibit pulses for power stage
2	FREE 2	freely linkable
3	FREE 3	freely linkable
4	FREE 4	freely linkable
5	FREE 5	freely linkable
6	f_d = 0 (act. speed = 0)	0 = n <> 0 1 = n = 0
7	Ctrl. inhibit (controller inhibit)	0 = no controller inhibit 1 = controller inhibit
8-11	Controller status	0 = controller initialization 1 = switch-on inhibited 3 = operation inhibited (controller inhibit) 6 = operation enabled 7 = message active 8 = fault active 9 = power off A = fail-QSP
12	Warning	0 = no warning 1 = warning
13	Message	0 = no message 1 = message
14	FREE 14	freely linkable
15	FREE 15	freely linkable

8.2 Fault analysis with the history buffer

- The history buffer is used to trace faults.
- Fault messages are stored in the history buffer in the order of their occurrence.
- Open the "Dialog Diagnosis" menu in the parameter menu by a double click.

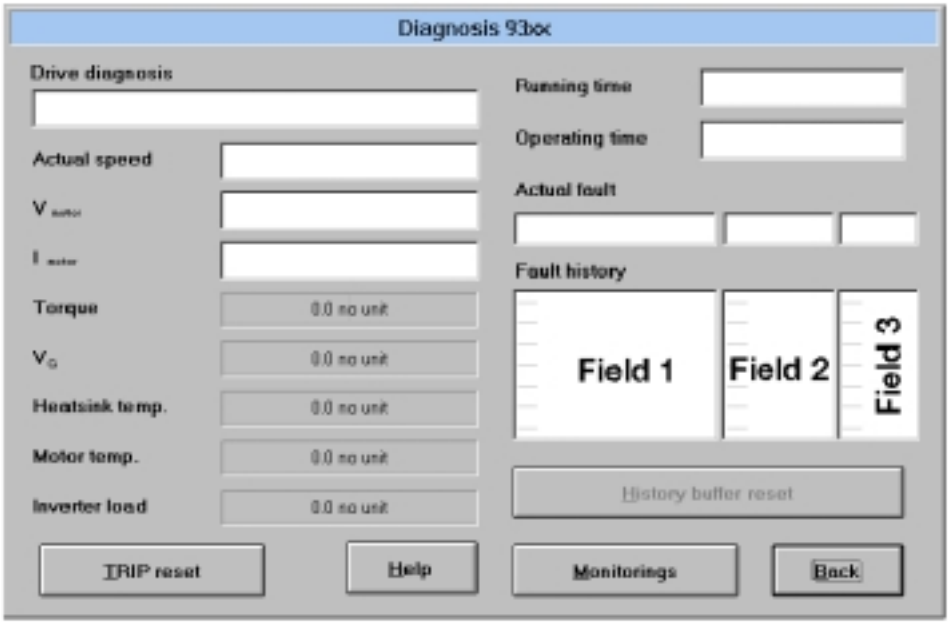

Fig. 8-2 Dialog box "Diagnostics 9300"

8.2.1 Structure of the history buffer

- The history buffer provides 8 memory locations. The fields under "fault history" show the memory locations 2 to 7.
- The fields under "Actual fault" show memory location 1. It contains information on the active fault.
  - The first memory location is written only after the elimination or acknowledgement of the active fault. This entry eliminates the last fault from the history buffer so that it can no longer be read.
- The history buffer provides three information units for every fault occurred. The fields under "Actual fault" and "Fault history" have the following meaning:
  - **Field 1:** Fault recognition and reaction
  - **Field 2:** Instant of fault
  - **Field 3:** Frequency of fault

The following table shows the assignment of information and codes.

Codes and information to be retrieved				Memory location
C0168	C0169	C0170	Subcode	
Fault recognition and reaction	Time of the last occurrence	Frequency of the immediately following occurrence	1	Active fault
			2	History buffer location 1
			3	History buffer location 2
			4	History buffer location 3
			5	History buffer location 4
			6	History buffer location 5
			7	History buffer location 6
			8	History buffer location 7

8.2.2 Working with the history buffer

- Open the "Dialog Diagnostics" menu in the parameter menu by a double click.

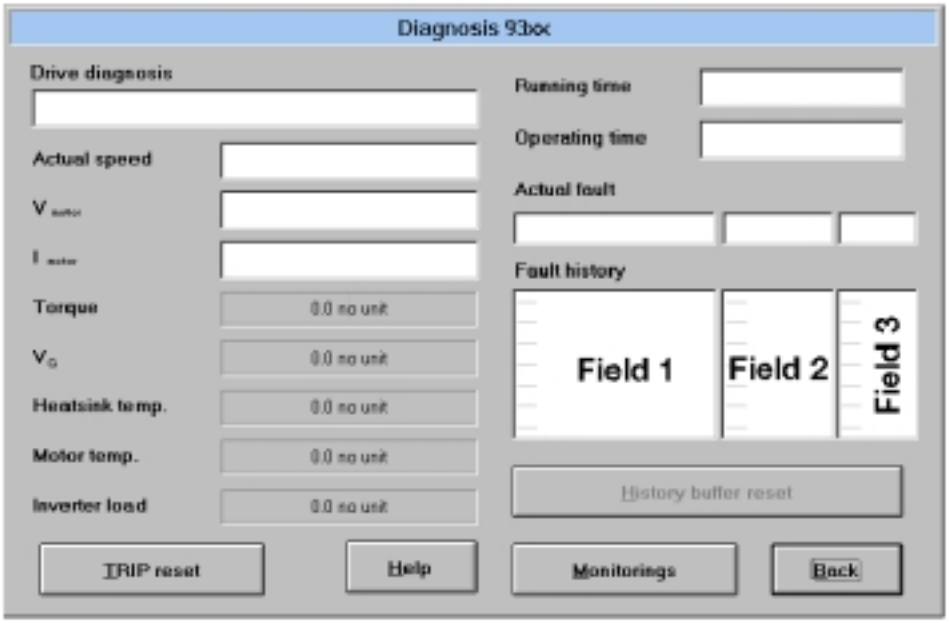

Fig. 8-3 Dialog box "Diagnostics 9300"

Fault recognition and reaction (field 1)

- Contains the fault recognition for every memory location and the reaction to the fault.
  – e.g. "OH3 TRIP"
  – With a fieldbus, the faults are indicated by a fault number. (📖 8-6, column 2)

Please note:

- For faults occuring at the same time with different reactions:
  – Only the fault of which the reaction has highest priority is input in the memory (priority = TRIP □ message □ FAIL-QSP □ warning).
- For faults occuring at the same time and with the same reaction (e.g. 2 messages):
  – Only the fault which occurred first is entered.

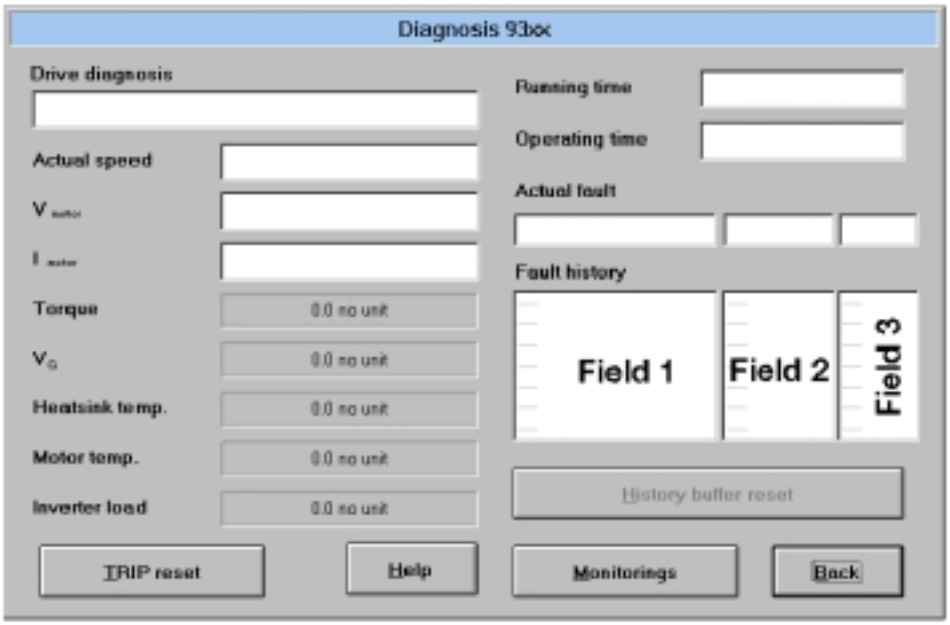

Fig. 8-4 Dialog box "Diagnostics 9300"

Time (field 2)

- Contains the times when the faults occurred
  – e.g. "1234567 s"
  – Reference time is the mains switch-on time (see Fig. 8-4, field top right).

Please note:

- If a fault is immediately followed by another several times, only the time of the last occurrence is stored.

Frequency (field 3)

- Contains the frequency of a fault immediately followed by the same fault. The time of the last occurrence is stored.

Reset fault

- Click on the "TRIP reset" button.

Delete history buffer

- This function is possible only when no fault is active.
- Click on the "fault memory reset" button".

8.3 Fault messages

Note!

If the fault indication is requested by a fieldbus, the fault indication is represented by a fault number (C0168/x). See column 2 and the footnote at the end of this table.

Display	Fault No.[2)]	Fault	Cause	Remedy
---	---	No fault	-	-
CCr	71	System fault	Strong interference on control cables	Screen the control cables
			Ground or earth loops in the wiring	PE wiring. 📖 4-33
CDE	220	Data error	Attempt to accept faulty data	New data transfer
	2221	Data error warning	The check sum of the transferred data is not correct.	New data transfer and check
CE0	61	Communication error	Interference during transmission of control commands via automation interface X1	Plug in automation module firmly, bolt down, if necessary
CE1	62	Communication error at the process data input object CAN_IN_1	CAN_IN_1 object receives faulty data or communication is interrupted	• Check cable at X4 • Check transmitter • Increase monitoring time under C0357/1 if necessary
CE2	63	Communication error at the process data input object CAN_IN_2	CAN_IN_2 object receives faulty data or communication is interrupted	• Check cable at X4 • Check transmitter • Increase monitoring time under C0357/2 if necessary
CE3	64	Communication error at the process data input object CAN_IN_3	CAN_IN_3 object receives faulty data or communication is interrupted	• Check cable at X4 • Check transmitter • Increase monitoring time under C0357/3 if necessary
CE4	65	BUS-OFF state	Controller has received too many incorrect telegrams by system bus X4 and has disconnected from the bus	• Check wiring • Check bus terminator (if any) • Check screen contact of the cables • Check PE connection • Check bus load: • Reduce baud rate (observe cable length)
EEr	91	External fault (TRIP-Set)	A digital input assigned to the TRIP-Set function has been activated	Check external encoder
H05	105	Internal fault		Contact Lenze
H07	107	Incorrect power stage	During initialization of the controller, an incorrect power stage was detected	Contact Lenze
H10	110	Sensor fault heat sink temperature	Sensor of the heat sink temperature detection indicates undefined values	Contact Lenze
H11	111	Sensor fault indoor temperature	Sensor of indoor temperature detection indicates undefined values	Contact Lenze
LP1	32	Motor phase failure	A current-carrying motor phase has failed	• Check motor • Check supply cables
			The current limit is set too low	Set a higher current limit under C0599
			This monitoring is not suitable for: • Synchronous servo motors • Field frequencies > 480 Hz	Deactivate monitoring with C0597= 3
LU	30	Undervoltage	DC bus voltage is smaller than the value fixed under C0173	• Check mains voltage • Check supply cable
r_{MAX}	200	Max. speed exceeded (C0596)	Active load (e.g. for hoists) too high Drive is not speed-controlled, torque excessively limited.	Check drive dimensioning. Increase torque limit if necessary.

Troubleshooting and fault elimination

Display	Fault No.[2]	Fault	Cause	Remedy
OC1	11	Short-circuit	Short-circuit	Find out cause of short-circuit; check cable.
			Excessive capacitive charging current of the motor cable.	Use motor cable which is shorter or of lower capacitance.
OC2	12	Earth fault	One of the motor phases has earth contact.	• Check motor • Check supply cables
			Excessive capacitive charging current of the motor cable.	Use motor cable which is shorter or of lower capacitance.
OC5	15	I x t overload	Frequent and too long acceleration with overcurrent Continuous overload with I_{motor} > 1.05 x $I_{rx.}$	Check drive dimensioning.
OH	50	Heat sink temperature is higher than the value set in the controller	Ambient temperature T_{amb} > 40 °C or 50 °C.	• Allow controller to cool and ensure better ventilation. • Check ambient temperature in the control cabinet.
			Heat sink very dirty.	Clean heat sink
			Incorrect mounting position.	Change mounting position.
OH3 [1]	53	Heat sink temperature is higher than the value set in the controller	Motor too hot because of excessive current or frequent and too long acceleration	Check drive dimensioning.
			No PTC connected.	Connect PTC or switch-off monitoring (C0583=3).
OH4	54	Heat sink temperature is higher than the value set under C0122.	Ambient temperature T_{amb} > 40 °C or 50 °C.	• Allow controller to cool and ensure better ventilation. • Check ambient temperature in the control cabinet.
			Heat sink very dirty.	Clean heat sink
			Incorrect mounting position.	Change mounting position.
			Value set under C0122 was too low.	Enter higher value.
OH7 [1]	57	Motor temperature is higher than the value set under C0121.	Motor too hot because of excessive current or frequent and too long acceleration	Check drive dimensioning.
			No PTC connected.	Connect PTC or switch-off monitoring (C0584=3).
			Value set under C0121 was too low.	Enter higher value.
OH8	58	PTC at terminals T1, T2 indicates motor overheat.	Motor too hot because of excessive current or frequent and too long acceleration	Check drive dimensioning.
			Terminals T1, T2 are not assigned.	Connect PTC or thermostat or switch off monitoring (C0585=3).
OU	20	Overvoltage	Excessive brake energy (DC bus voltage higher than set under C0173).	Use brake module or regenerative power supply module.
P01	151	Limit switch negative	Negative limit switch was reached.	• Control drive in positive direction. • Check terminal connection X5/E2.
P02	152	Positive limit switch	Positive limit switch was reached.	• Control drive in negative direction. • Check terminal connection X5/E1.
P03	153	Contouring error	Phase difference between set and actual position is larger than the contouring error limit set under C0255.	• Extend contouring error limit under C0255 • Switch off the monitoring if necessary (C0589 = 3).
			Drive cannot follow the digital frequency (I_{max} limit).	Check drive dimensioning.
P04	154	Negative position limit	Negative position limit (C1224) was not reached.	Find out why the value was not reached (e.g. "incorrect" position targets, set function position value) and adjust the negative position limit (C1224) if necessary.
P05	155	Positive position limit	Positive position limit (C1223) was exceeded.	Find out why the value was exceeded (e.g. "incorrect" position targets, set function position value) and adjust the positive position limit (C1223) if necessary.
P06	156	No reference	The homing point is unknown. For absolute positioning no homing was performed before the first positioning.	Perform one of the following functions and restart: • Manual homing. • Start homing in the program. • Set reference.

Troubleshooting and fault elimination

Display	Fault No.[2)]	Fault	Cause	Remedy
P07	157	PS absolute mode instead of relative mode.	An absolute PS (C1311) was performed during relative positioning (position mode C1210).	Perform one of the following functions and restart: ● Change from absolute PS to relative PS. ● Change position mode.
P08	158	Actual offset out of range.	Actual home offset (C1226) out of position limits. Fault of the program function "Set position value".	Adjust position limits if necessary, or check whether program function "Set position value" is to be applied.
P09	159	Impermissible programming	Impermissible programming	Check position program: ● After a PS with final speed a PS with positioning has to follow; waiting for input is not permissible.
P12	162	Encoder range	The range of the absolute encoder was exceeded.	● Return drive by manual positioning. ● Check position limits and adjustment of the encoder. ● The absolute encoder has to be dimensioned and mounted such that its range is not exceeded over the complete positioning range.
P13	163	Phase overflow	● Phase controller limit reached ● Drive cannot follow the digital frequency (I_{max} limit).	● Enable drive ● Check drive dimensioning
P14	164	1st contouring error	The drive cannot follow the setpoint. Contouring error is higher than limit value in C1218/1.	● Increase current limit C0022 (observe max. motor current). ● Reduce acceleration. ● Check drive dimensioning. ● Increase limit value under C1218.
P15	165	2nd contouring error.	The drive cannot follow the setpoint. Contouring error is higher than limit value in C1218/2.	● Increase current limit C0022 (observe max. motor current). ● Reduce acceleration. ● Check drive dimensioning. ● Increase limit value under C1218.
P16	166	Transmission error of a synch telegram on the system bus.	Sync telegram from master (PLC) is out of time pattern.*	Set C1121 (Sync cycle) to the transmission cycle of the master (PLC).
			Sync telegram of master (PLC) is not received.*	● Check communication channel. ● Check baud rate, controller address.
			Controller enable (RFR) too soon.	Enable controller with delay. The required delay depends on the time between the synch telegrams.
			* C0362 indicates the time between 2 sync telegrams (C0362 = 0, communication interrupted).	
P17	167	TP control error	Simultaneous use of the TP input by different function blocks (e.g. FB DFSET and POS). A conflict occurs.	Configure another TP input for FB POS (not possible for DFSET) or switch off monitoring under C0580.
P18	168	Internal limitation	Input of extremely high or low machine parameters.	Check machine parameters.
P21	171	Contouring error RC	Phase difference between set and actual position is larger than the contouring error limit set under C1328.	Extend contouring error limit with C1328. If necessary, switch-off the monitoring (C1329=3).
			Drive cannot follow the digital frequency (I_{max} limit).	Check drive selection.
PEr	74	Program interference	A fault in the program was detected.	Send controller with data (on diskette) to Lenze.
PI	79	Initializing error	● A fault was detected during transfer of parameter set between the controllers ● Parameter set does not match controller.	Correct parameter set.
PR0 PR1	75 72	Parameter set error	Fault when loading a parameter set. CAUTION: The factory setting loaded automatically.	● Set the required parameters and store them under C0003. ● For PR0 the supply voltage must be switched off additionally.

Troubleshooting and fault elimination

Display	Fault No.[2]	Fault	Cause	Remedy
Sd2	82	Resolver fault	Resolver cable interrupted.	● Check the resolver cable for open circuit ● Check resolver ● Or switch off monitoring (C0586 = 3).
Sd3	83	Encoder fault at X9/8	Cable interrupted.	Check cable for open circuit.
			Input X9 PIN 8 not assigned.	Assign input X9 PIN 8 with 5V or switch off monitoring (C0587 = 3).
Sd5	85	Master current source defective	Master current at X6/1 X6/2 < 2mA.	● Check cable for open circuit. ● Check master current source.
Sd6	86	Sensor fault	Encoder of the motor temperature detection at X7 or X8 indicates indefinite values.	Check supply cable for firm connection. Switch off monitoring with C0594 = 3 if necessary.
Sd7	87	Encoder fault	Absolute encoder with RS485 interface does not transmit data.	Check supply cable. Check encoder. Check voltage supply C0421. No Stegmann encoder connected.

1) Temperature detection via resolver or incremental encoder.

2) Displayed value = {fault no.} + 0 ≙ TRIP
= {fault no.} + 1000 ≙ Message
= {fault no.} + 2000 ≙ Warning
= {fault no.} + 2000 ≙ FAIL-QSP

8.4 Reset of fault messages

TRIP

- After eliminating the fault, the pulse inhibit is only reset after acknowledgement of TRIP.
- Acknowledge TRIP by:
  - Global Drive Control: Click the button ”TRIP reset” in the dialog box ”Diagnostics 9300”.
    (📖 8-4, “Working with the history buffer”)
  - Keypad 9371 BB:
    Press STOP key. Then press RUN to enable the controller again.
  - Fieldbus module: Set C0043 = 0
  - Control word C0135
  - Terminal X5/E5
  - Control word AIF
  - Control word system bus (CAN)

Note!

If a TRIP source is still active, TRIP cannot be reset.

Message

- After eliminating the fault, the pulse inhibit is reset automatically.

Warning!

After eliminating the fault, the drive starts automatically.

FAIL-QSP

- After eliminating the fault, the pulse inhibit is only reset after acknowledgement of TRIP.
- Acknowledge TRIP by:
  - Global Drive Control: Click the button ”TRIP reset” in the dialog box ”Diagnostics 9300”.
    (📖 8-4, “Working with the history buffer”)
  - Keypad 9371 BB:
    Press STOP key. Then press RUN to enable the controller again.
  - Fieldbus module: Set C0043 = 0
  - Control word C0135
  - Terminal X5/E5
  - Control word AIF
  - Control word system bus (CAN)

Note!

If a TRIP source is still active, TRIP cannot be reset.

Warning

- After eliminating the fault, the warning is reset automatically.

9 Maintenance

- The controller is free of maintenance if the prescribed conditions of operation are observed. (📖 3-2)
- If the ambient air is polluted, the air vents of the controller may be obstructed. Therefore, check the air vents periodically (depending on the degree of pollution approx. every four weeks):

Free the obstructed air vents using a vacuum cleaner.

Stop!

Do not use sharp or pointed tools such as knives or screwdrivers to clean the air vents.

Maintenance

Show/Hide Bookmarks

EDS9300-RK
00412735

Lenze

Manual
Part K

Application examples

Global Drive

Servo register controller 9300

This documentation is valid for the servo register controllers 9300 as of version:

33.932X	ER	2G	1x	(9321 - 9329)
33.933X	ER	2G	1x	(9330 - 9332)
33.932X	CR	2G	1x	Cold Plate (9321 - 9328)

Type

Desgin:
E = Enclosure IP20
C = Cold Plate
xK = Cam profiler
xP = Position controller
xR = Register controller
xS = Servo inverter

Hardware level and index

Software level and index

Variant

Explanation

© 1999 Lenze GmbH & Co KG

Without written approval of Lenze Lenze GmbH & Co KG no part of these Instructions must be copied or given to third parties.

All indications given in these Operating instructions have been selected carefully and comply with the hardware and software described. Nevertheless, deviations cannot be ruled out. We do not take any responsibility or liability for damages which might possibly occur. Required corrections will be made in the following editions.

Version 1.0 12/99

Contents

Part K

15 Application examples 15-1

15.1 Cross-cutter, asynchronous 15-2
15.1.1 Master value 15-3
15.1.1.1 Master value resolution 15-3
15.1.1.2 Master encoder position 15-3
15.1.1.3 Pilot tension drive with 9300 as master encoder 15-3
15.1.2 Motor + gearbox 15-3
15.1.2.1 Motor power 15-3
15.1.2.2 Motor speed for max. cutting power 15-4
15.1.2.3 Last adaptation 15-4
15.1.3 Backlash 15-4
15.1.3.1 Mechanical design in general 15-4
15.1.4 Feedback system 15-4
15.1.5 Sensors 15-5
15.1.5.1 Register mark sensor 15-5
15.1.5.2 Cylinder sensor 15-5
15.1.6 Product parameters 15-5
15.1.7 Peripheral system 15-6
15.1.7.1 System bus (CAN) 15-6
15.1.7.2 BCD decade switch 15-8
15.1.7.3 Other system bus components 15-8
15.1.8 Fieldbus 15-9

15.2 Tension control (insetter) 15-10

15.3 Coating station 15-11

15.4 Labelling station with asynchronous cross-cutter 15-12

Contents

15 Application examples

This chapter provides information on the dimensioning and planning of the 9300 register control using four application examples. A warranty or liability, particularly of achievable accuracies cannot be granted.

Application examples

15.1 Cross-cutter, asynchronous

- The material web is supplied to the cutter using a pilot tension station.
- The cutting cylinder cuts the material once per revolution.
- During the time of cutting:
  Circumferential speed of cutting cylinder >= material speed.
- The cutting position is aligned and held at a register mark (cut register control).
- The cut format (**C**ut **F**ormat, **CF**) is an integer part of the print format (**P**rint **F**ormat, **PF**): PF = n*CF, n=1,2,3,4,...
  CF and PF can be set.

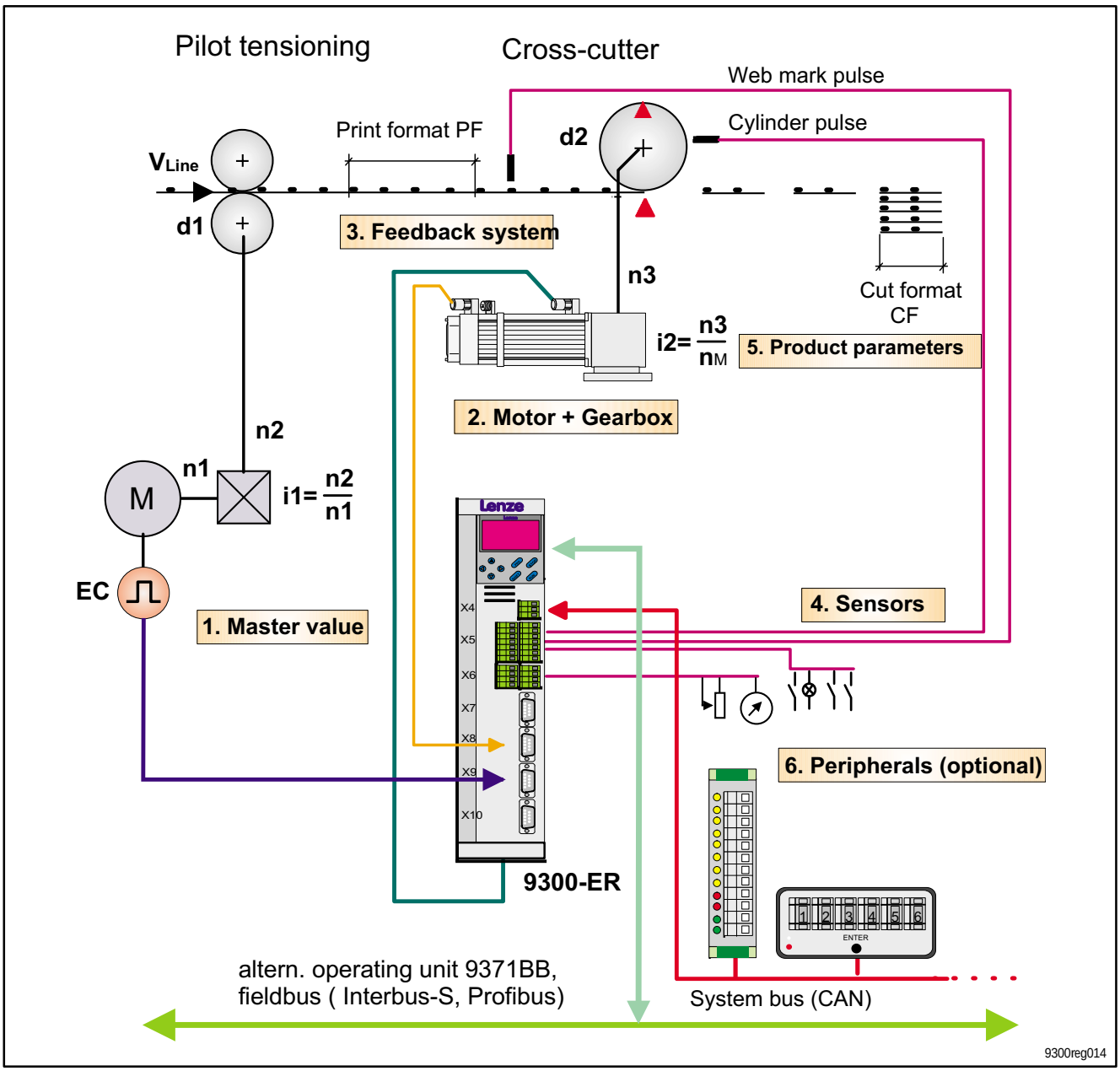

Fig. 15-1 Cross-cutter, asynchronous

15.1.1 Master value

15.1.1.1 Master value resolution

The following increments should be selected as a minimum for accuracies □s < ±0.3 mm.

$$EC[Imp/U] = \frac{100000 \cdot \pi \cdot d1[m]}{v_{Line}[m/s] \cdot i1}$$

Example:

- Measuring wheel circumference: $\pi * d1 = 0{,}5$ m
- Max. line speed: $v_{line} = 300$ m/min
- Encoder directly mounted to the measuring wheel: i1 = 1
- Master encoder increments: $1000[Imp/U] = \frac{100000 \cdot 0.5\ m}{5\ m/s \cdot 1}$

Note:

- A large number of increments (>>10000 increments/rev.) can be achieved using a sinus encoder together with an interpolation circuit (e.g. Heidenhain: ROD 4xx with EXE 6xx).
- Observe encoder frequency of the master encoder input X9 of 500 kHz!

15.1.1.2 Master encoder position

The distance between measuring wheel/measuring roll (master encoder and cutting position must be < 0.5m). This is especially required to achieve high accuracies (□s < ±0.3 mm).

15.1.1.3 Pilot tension drive with 9300 as master encoder

If the pilot tension drive is equipped with a 9300 servo inverter, observe the following recommendations:

- Use encoder output X10 as master source.
- Use configuration C05=5xxx (virtual master) in the pilot tension drive. Select C30 (DFOUT constant) acc. to chapter 15.1.1.2.

15.1.2 Motor + gearbox

15.1.2.1 Motor power

The approximate static motor power is calcuated as follows:

$$P_{stat}[W] = M_r[Nm] \cdot 2 \cdot \pi \cdot n[s^{-1}] + P_{cut}$$

Since the power required for cutting (P_{cut}) and the bearing friction (M_r) are often unknown, these data must be taken from the real machine or found empirically.

15.1.2.2 Motor speed for max. cutting power

Asynchronous machine of series MDxKA..., MDxQA..., DxRA...

- $n_M = 0.7...1.3 \cdot n_{Mrated}$

Synchronous machine of series MDxKS...

- $n_M = 0.7...1.0 \cdot n_{Mrated}$

15.1.2.3 Last adaptation

The reduced inertia of the load to the motor should be calculated as follows:

$$\frac{J_L}{J_M \cdot i2^2} = 0.1...10$$

- J_L = load inertia (cut cylinder)
- J_M = motor inertia

Note:

- Ensure the above condition by selecting a suitable motor size if high load inertias occur.

15.1.3 Backlash

$$\Delta s_{mech}[mm] = \frac{\Delta\varphi[arcmin] \cdot CF_{max}[mm] \cdot 2}{21600}$$

- Δs_{mech} = Mechanical cut tolerance
- $\Delta\varphi$ = backlash
- CF_{max} = largest cut format

Note:

- The approximate achievable cut accuracy at the product is calculated as follows (torsion neglected): $\Delta s = \Delta s_{mech} + \Delta s_{elect}$
- If necessary, use a low-backlash gearbox with $\Delta\varphi < 1$ arc min.

15.1.3.1 Mechanical design in general

The mechanical element should be of low torsion.

15.1.4 Feedback system

If you consider the other items, the cut accuracy which can be achieved electrically (abs., no mechanical faults) is approximately:

- for resolver feedback system

  $$\Delta s_{elect}[arcmin] = \frac{CF_{max}[mm]}{i2 \cdot 360}$$

- for TTL encoder feedback system (4096 pulses/rev)

  $$\Delta s_{elect}[arcmin] = \frac{CF_{max}[mm]}{i2 \cdot 1080}$$

- for SINCOS encoder feedback system (512 periods)

  $$\Delta s_{elect}[arcmin] = \frac{CF_{max}[mm]}{i2 \cdot 2160}$$

  CF_{max} = largest cut format

15.1.5 Sensors

15.1.5.1 Register mark sensor

Light or laster sensor with an operating sequence frequency of 10 kHz and contactless 24V PNP switch output (e.g. Sick: NT6, KT5, Balluf: BKT).

15.1.5.2 Cylinder sensor

Optical sensor, initiator or pulse encoder with contactless 24V PNP output.

- Repeat accuracy: $\frac{\Delta s[mm]}{10}$

  Δs = cut accuracy at the product, abs.

15.1.6 Product parameters

The following important product and machine parameters must be entered in the codes (check ranges):

Code	LCD	Possible settings				IMPORTANT	
		Lenze	Choice				
C1300	Shaft format	2304	192	{1 units}	16000	LSF length shaft format of the machine, material feed for one revolution	📖 7-27
C1301	Enc const	8192	100	{1 p/rev}	32767	EC-LS, increments of the master encoder (e.g. at the mechanical longitudinal shaft of the machine) ● p/rev = pulses per revolution	📖 7-27
C1302	CCF	5376	192	{1 units}	16000	Cylinder circumference Circumference of the drive shaft (cutting cylinder or insetter)	📖 7-27
C1308	Cut format	2304	192	{1 units}	16000	Cut format (CF), selection of the cut length	📖 7-29
C1309	Print format	4608	192	{1 units}	16000	Print format (PF), selection of the print format	📖 7-29
C1316	TP-window	40	0	{1 mm}	999	Mark window width for the mark detection (E5) ● 0 = window switched off	📖 7-29 📖 7-34

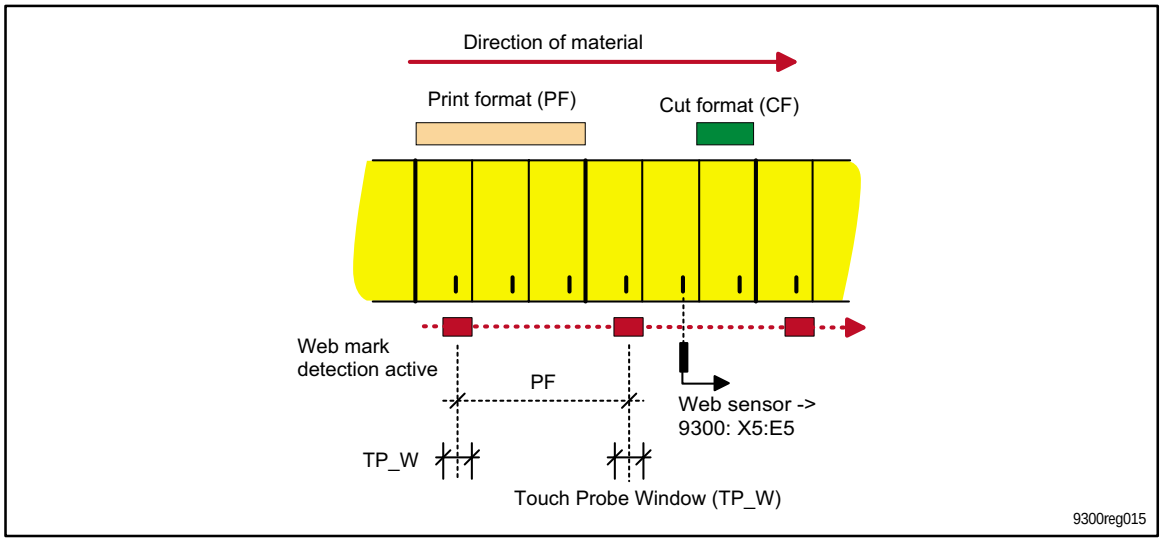

Fig. 15-2 Relationship of the product parameters

15.1.7 Peripheral system

15.1.7.1 System bus (CAN)

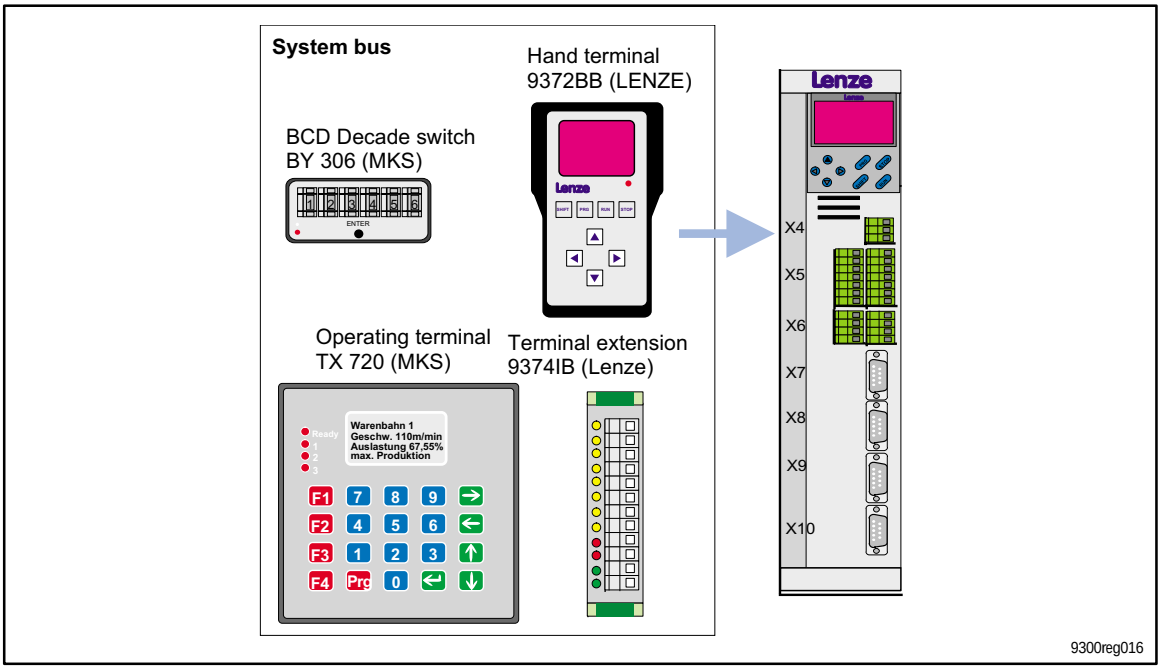

Fig. 15-3 System bus (CAN) - overview

Terminal extension 9374IB

In the configuration 30000 and 30010, the following I/O signals are already assigned to the process data object CAN-IN2/CAN-OUT2:

Note:

For further information on commissioning and setting of the terminal extension please refer to the operating instructions 9374IB.

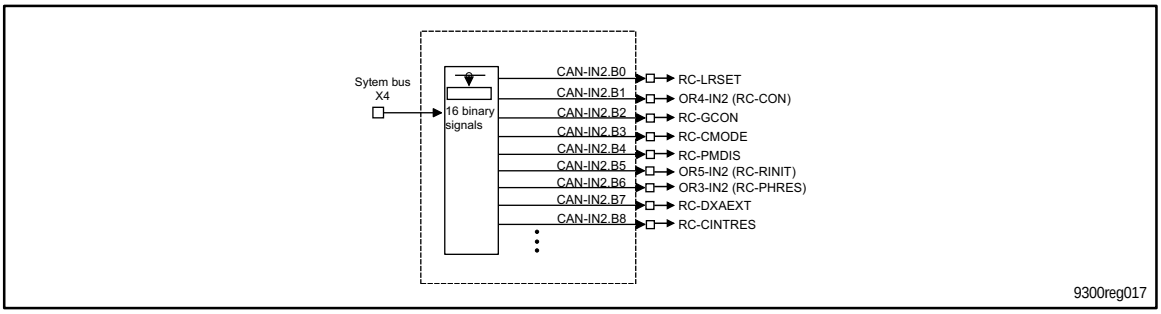

Fig. 15-4 System bus (CAN) - digital inputs

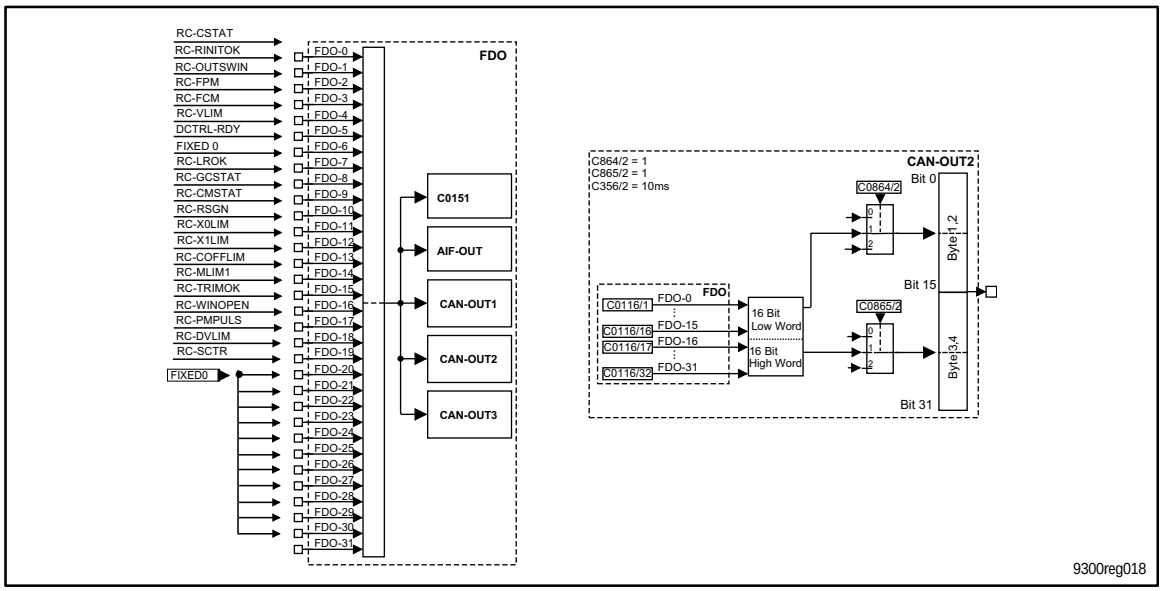

Fig. 15-5 System bus (CAN) - digital outputs

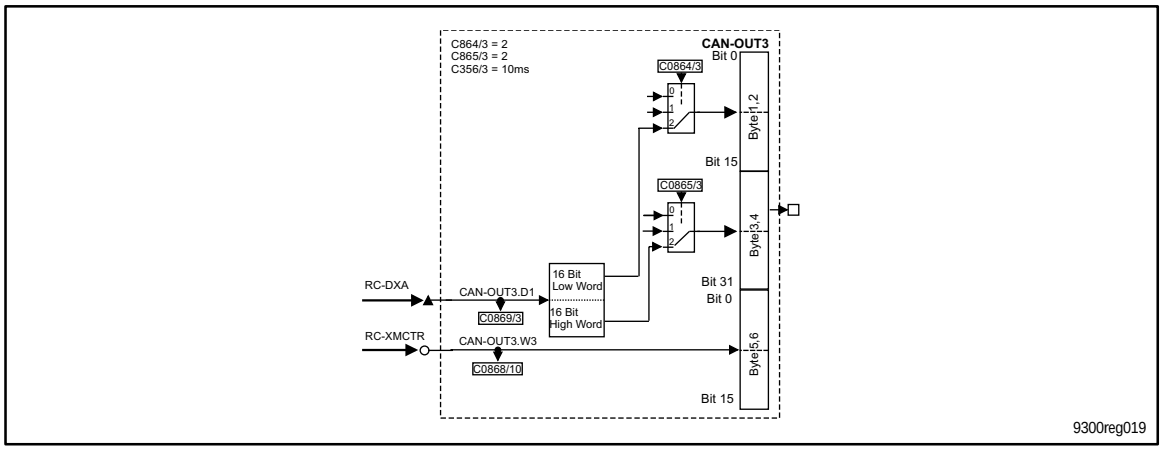

Fig. 15-6 System bus (CAN) - process output signals

15.1.7.2 BCD decade switch

BY306 (from MKS)

In the configurations 30000 and 30010, the input of the three most important parameters (PF, CF, RPTRIM) via CAN decade switches is already configured (see figure).

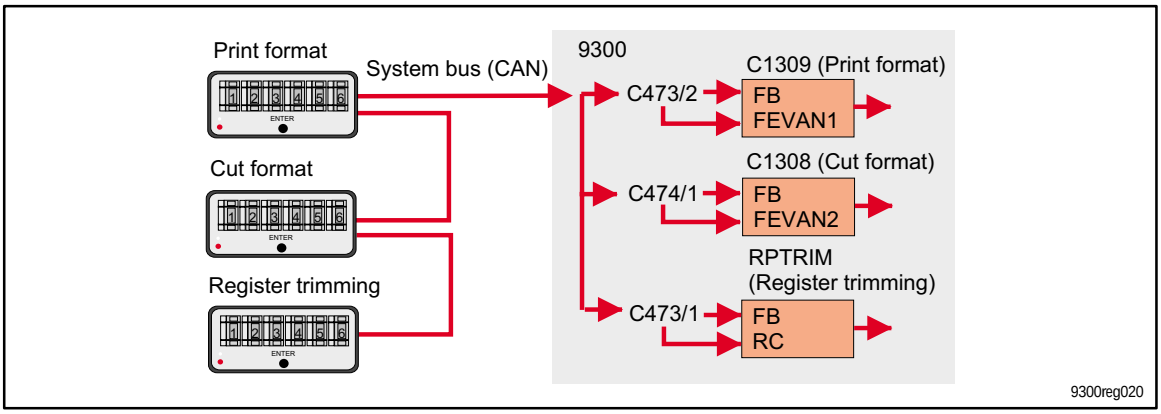

Fig. 15-7 Configuration CAN decade switch

Note:

For further information on commissioning and setting of the decade switches BY 306 please refer to the operating instructions BY306.

15.1.7.3 Other system bus components

- Hand terminal 9372IB for the commissioning of the standard configuration and diagnostics, particularly when using fieldbus components (assigned AIF slot).
- Operating terminal TX720 (from MKS) as alphanumeric man-machine interface.

15.1.8 Fieldbus

Plug-in modules for **INTERBUS (2111IB), PROFIBUS (2131IB)** and **LECOM (2102)** are available and are plugged on the AIF interface of the controller.

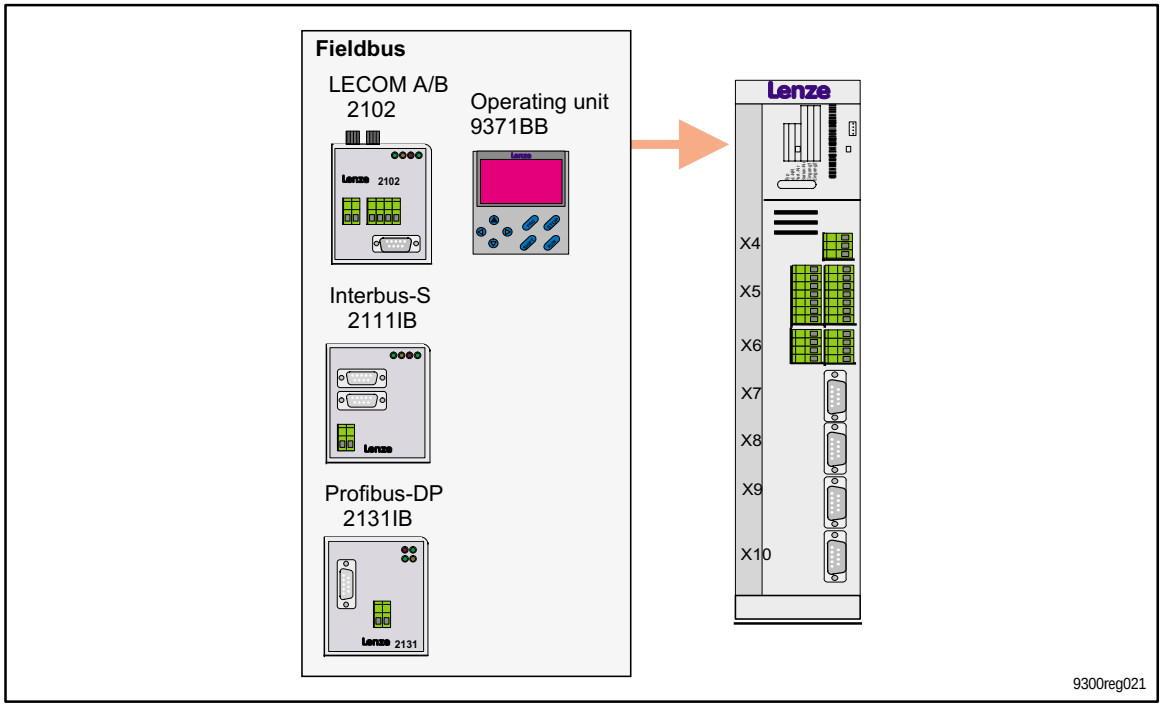

Fig. 15-8 Plug-in modules

Note:

The information given in the chapters 15.1.1 to 15.1.7 also apply to the three following applications.

15.2 Tension control (insetter)

- The material printed on one side is fed to the printer (d1) via a feeding station (d2) for the second print.
- The feeding station works in the generator mode and generates an adjustable basic web tension.
- The position of the first print (register mark) is measured relatively to the second print (cylinder pulse).
- The web tension (length) is controlled such that the first and second print are in-register.
- The format of the second print corresponds to that of the first print.

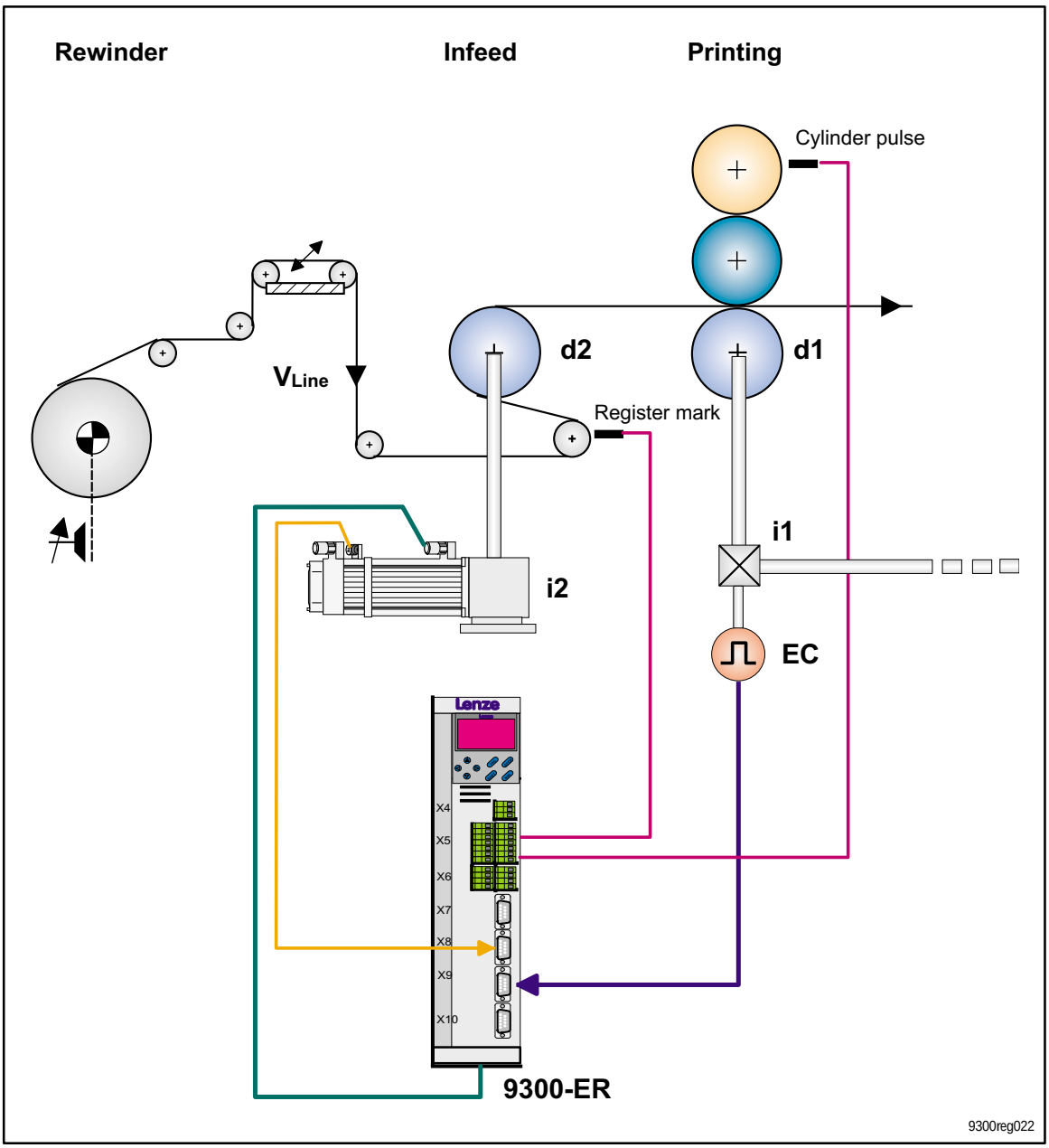

Fig. 15-9 Tension control (insetter)

15.3 Coating station

- The printed material is fed to the flexo printer via an edge control.
- The flexo cylinder applies paint or glue on the material.
- The position of the print (register mark) is measured relatively to the coating (cylinder pulse).
- The position of the flexo cylinder is aligned and held at the detected register mark by phase corrections (register control).
- The registers can be trimmed during operation.

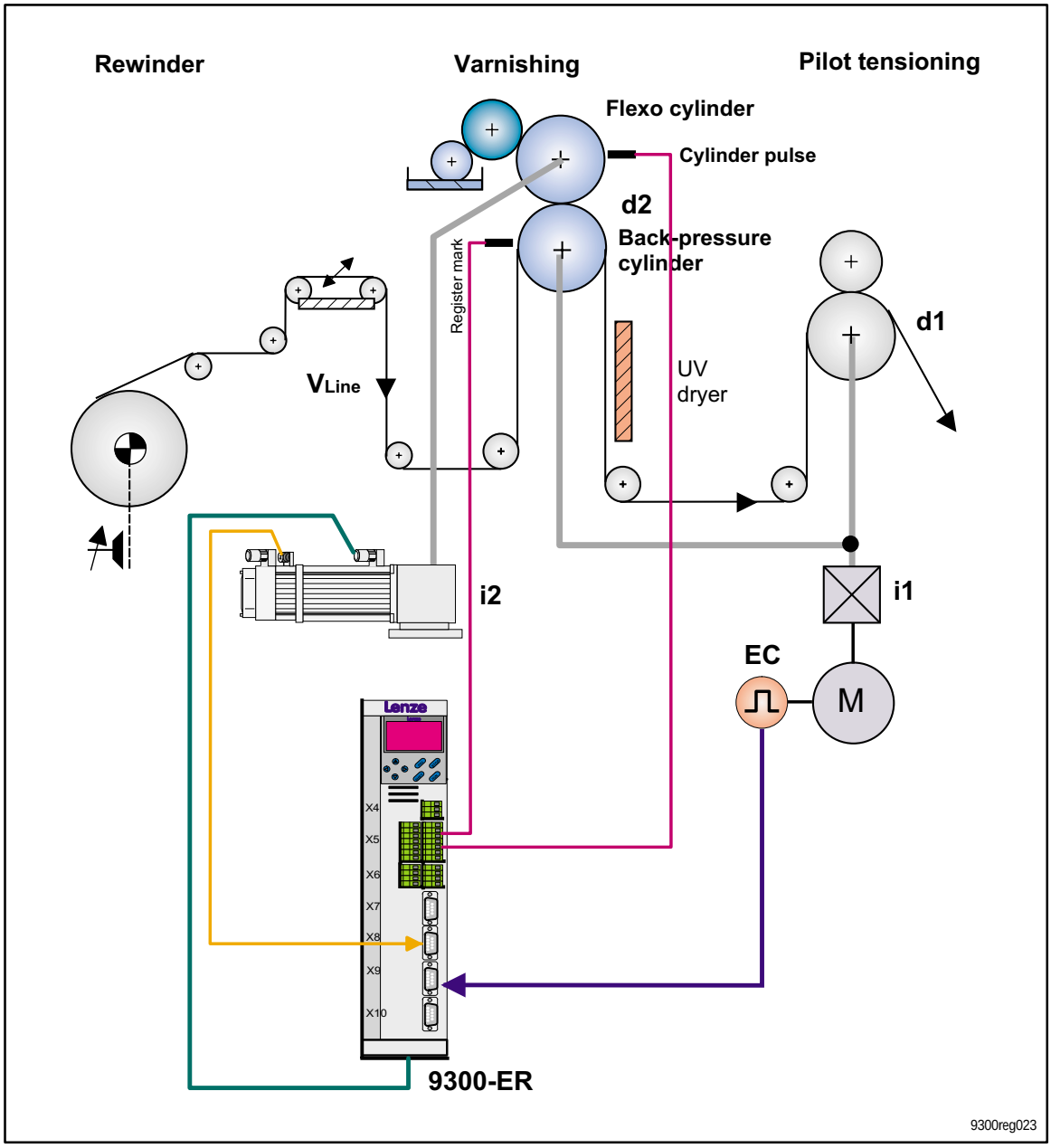

Fig. 15-10 Coating station

15.4 Labelling station with asynchronous cross-cutter

- The printed material is fed to the cutter via a pilot tension station.
- The cutter works with constant speed. Condition for the time of cutting: Circumferential speed cut cylinder >= material speed.
- The cut label is transported to the bottles via a vacuum roll.
- The position of the web (register mark) is aligned at held at the cut position (cylinder pulse) (cut register control, inverse principle 15.1).
- The cut format (CF) is an integer part of the print format (PF):
  PF = n*CF, n=1,2,3,4,...
  CF and PF can be set.

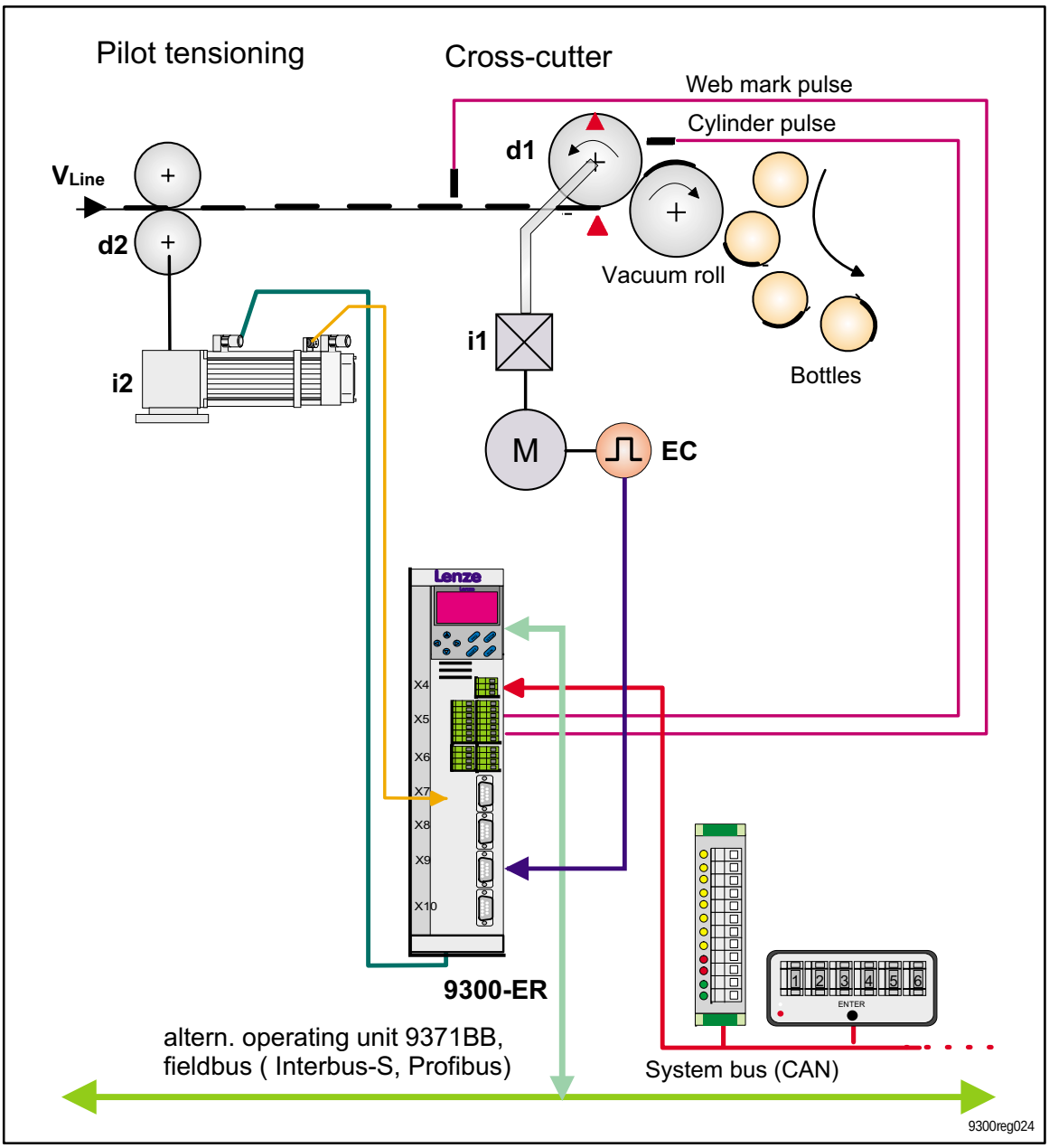

Fig. 15-11 Labelling station with asynchronous cross-cutter

Show/Hide Bookmarks

EDS9300D-RL
00412736

Lenze

Manual
Part L

Signal-flow charts

Global Drive

Servo register controller 9300

This documentation is valid for the servo register controllers 9300 as of version:

33.932X	ER	2G	1x	(9321 - 9329)
33.933X	ER	2G	1x	(9330 - 9332)
33.932X	CR	2G	1x	Cold Plate (9321 - 9328)

Type

Desgin:
E = Enclosure IP20
C = Cold Plate
xK = Cam profiler
xP = Position controller
xR = Register controller
xS = Servo inverter

Hardware level and index

Software level and index

Variant

Explanation

© 1999 Lenze GmbH & Co KG

Without written approval of Lenze Lenze GmbH & Co KG no part of these Instructions must be copied or given to third parties.

All indications given in these Operating instructions have been selected carefully and comply with the hardware and software described. Nevertheless, deviations cannot be ruled out. We do not take any responsibility or liability for damages which might possibly occur. Required corrections will be made in the following editions.

Version 1.0 12/99

Contents

Part L

16 Signal flow charts 16-1

16.1 Main signal flow chart 16-1

16.1.1 Signal flow charts 16-4

Contents

16 Signal flow charts

16.1 Main signal flow chart

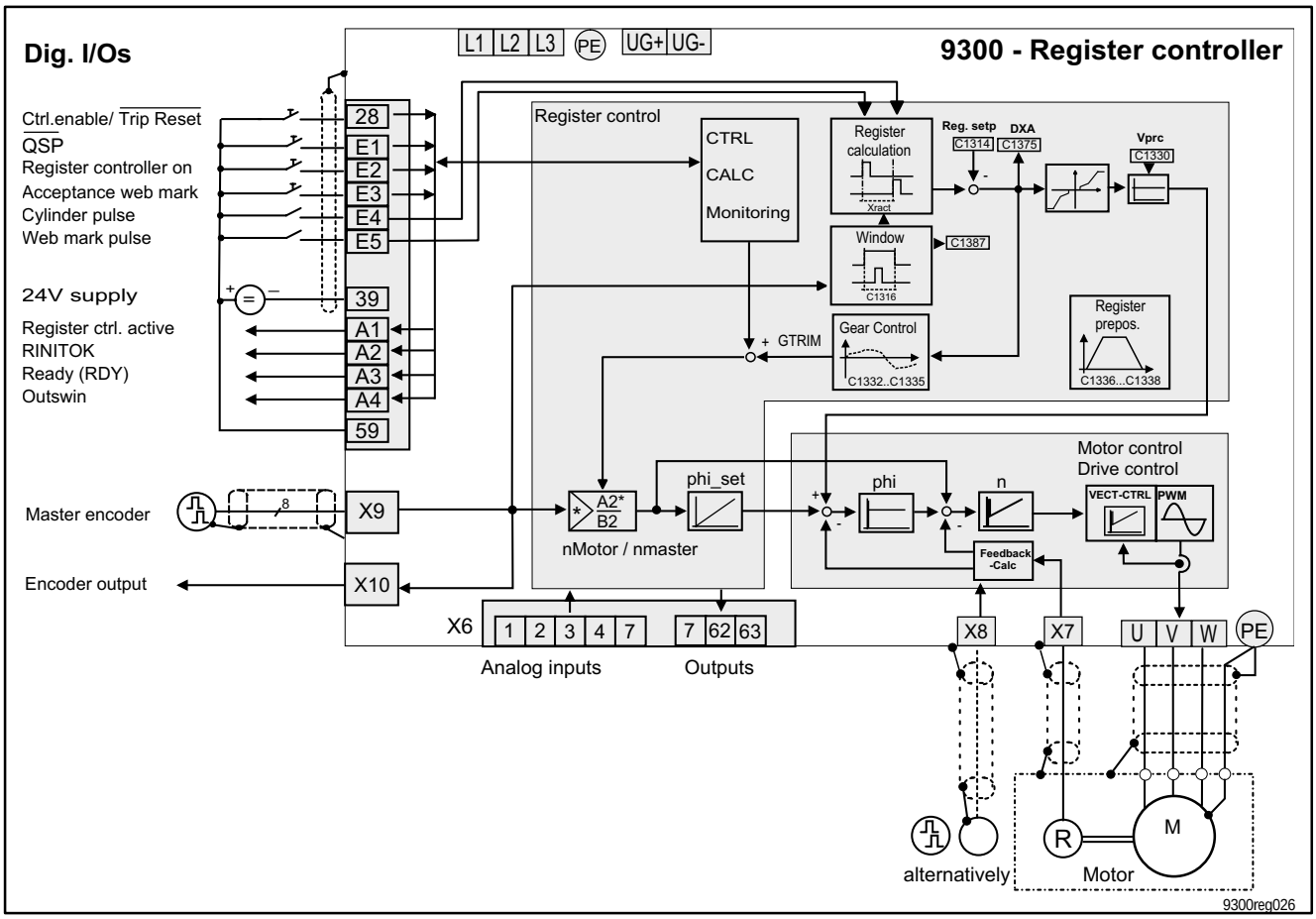

Fig. 16-1 Flow chart of signal configuration 30000

FB DFIN

The master encoder signal at X9 is converted into a speed/phase setpoint Xmaster (DFIN-OUT). C425 (DFIN const.) fixed on 16384 incr./rev.

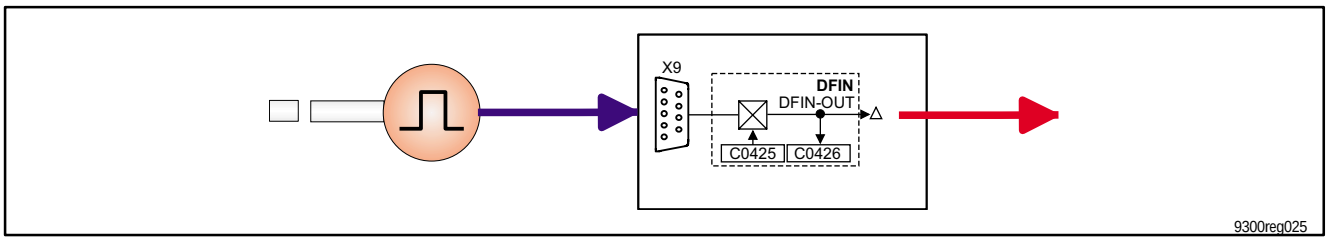

Fig. 16-2 Conversion of the master encoder signal

Signal-flow charts

FB RC

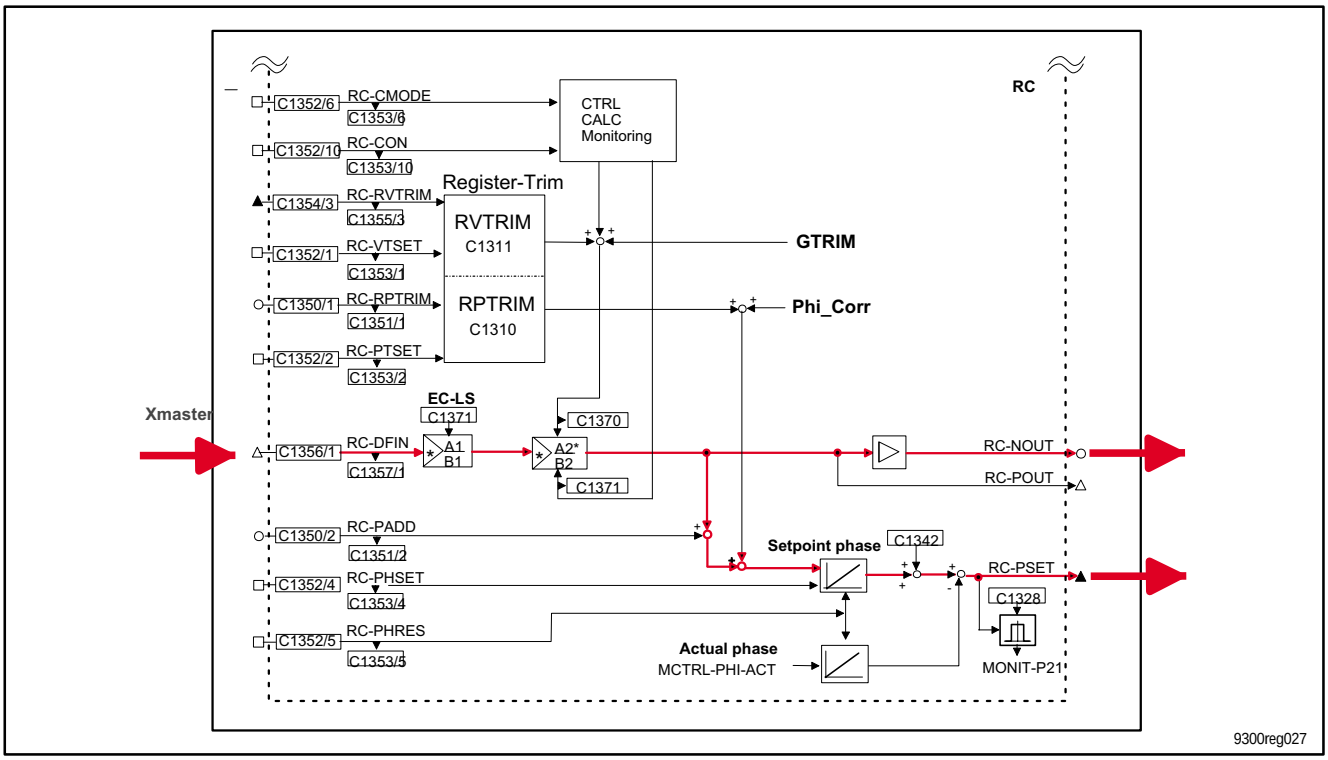

Fig. 16-3 Function block register control (RC)

1. The master value Xmaster is evaluated such that a phase ratio synchronizing results between motor shaft (n_M) and master encoder ($n_{master\ encoder}$) with the following speed ratio:

- C1303 = 0 (cross-cutter):

$$n_M[1/min] = n_{master\ encoder}[1/min] \cdot \frac{LSF(C1300) \cdot Gearnum(C1304) + RVTRIM + GTRIM}{CF(1308) \cdot Geardenom(C1305)}$$

- C1303 = 1 (insetter):

$$n_M[1/min] = n_{master\ encoder}[1/min] \cdot \frac{LSF(C1300) \cdot Gearnum(C1304) + RVTRIM + GTRIM}{CCF(1302) \cdot Geardenom(C1305)}$$

GTRIM are possible gearbox factor trimmings of the sensor compensation.
RVTRIM are possible web length trimmings.

– Display codes are available for the following terms:

LSF (C1300) · i_{num} (C1304) → A2* (DIS: C1370)
CF (C1308) · i_{denom} (C1305) → B2 (DIS: C1371)

2. The FB RC compares setpoint and actual phase and outputs the setpoint speed (RC-NOUT) and the following error (RC-PSET).

3. The phase manipulated value RC-COUT (DIS: C1376) created by the register control is added to the setpoint phase.

FB MCTRL

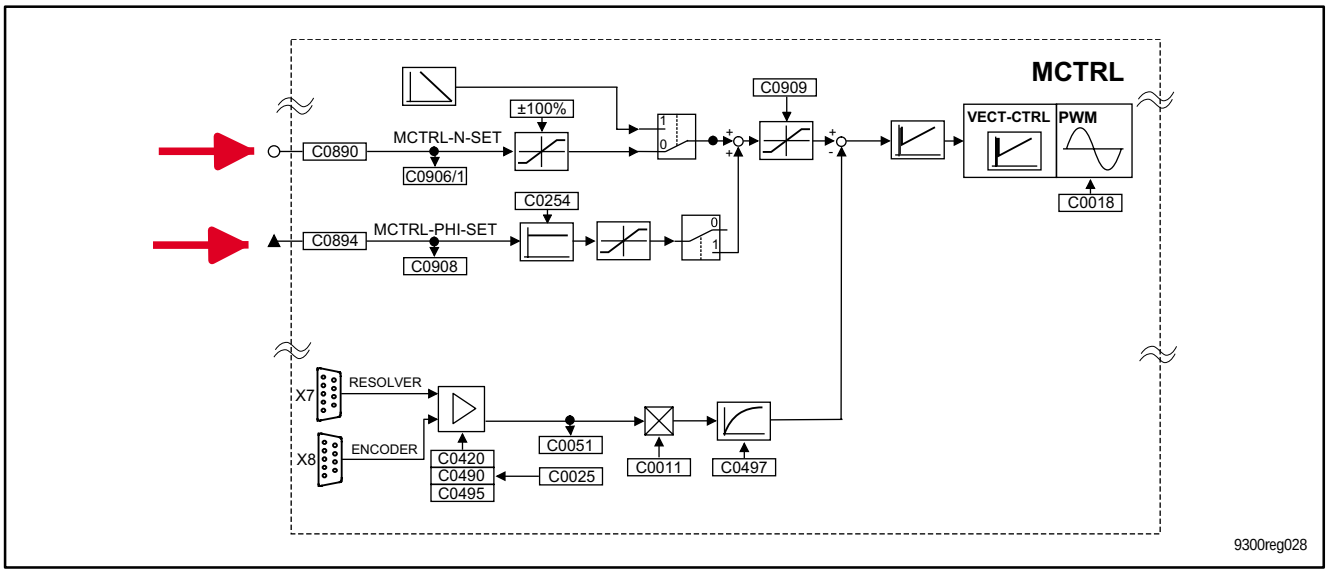

Fig. 16-4 FB MCTRL: Phase, speed, current vector calculation and current control.

The main setpoints are

- Speed setpoint: MCTRL-N-SET (DIS: C0906/1)
- Following error MCTRL-PHI-SET (DIS:C0908)

16.1.1 Signal flow charts

Show/Hide Bookmarks

EDS9300-RM
00412737

Lenze

Manual
Part M

Glossary

Table of keywords

Global Drive

Servo register controller 9300

This documentation is valid for the servo register controllers 9300 as of version:

33.932X	ER	2G	1x	(9321 - 9329)
33.933X	ER	2G	1x	(9330 - 9332)
33.932X	CR	2G	1x	Cold Plate (9321 - 9328)

Type

Desgin:
E = Enclosure IP20
C = Cold Plate
xK = Cam profiler
xP = Position controller
xR = Register controller
xS = Servo inverter

Hardware level and index

Software level and index

Variant

Explanation

© 1999 Lenze GmbH & Co KG

Without written approval of Lenze Lenze GmbH & Co KG no part of these Instructions must be copied or given to third parties.

All indications given in these Operating instructions have been selected carefully and comply with the hardware and software described. Nevertheless, deviations cannot be ruled out. We do not take any responsibility or liability for damages which might possibly occur. Required corrections will be made in the following editions.

Version 1.0 12/99

Contents

Part M

17 Glossary 17-1

18 Table of keywords 18-1

Contents

17 Glossary

Term	Meaning
AIF	Automation interface (X1)
CAN	Controller Area Network
CE	Communauté Européenne (English: European Community)
Code	For entry and display (access) of parameter values. Variable addressing according to the format "code/subcode" (Cxxxx/xx). All variables can be addressed via the code digits.
Contouring error	Deviation between momentary position setpoint and actual position. Display for a momentary contouring error under C0908.
Contouring error monitoring	Monitors the momentary contouring error if the contouring error tolerance is exceeded and releases a fault indication, if necessary.
Contouring error tolerance	If the contouring error reaches a defined contouring error tolerance, a fault indication is released.
Ctrl. enable	Controller enable
Ctrl. inhibit	Controller inhibit (= $\overline{\text{Controller enable}}$)
FB	Function block
Fieldbus	For data exchange between higher-level control and positioning control, e.g. INTERBUS or PROFIBUS.
FPDA	Freely programmable digital output
FPDE	Freely programmable digital input
GDC	Global Drive Control (PC program for Lenze controllers - Windows)
INTERBUS	Industrial communication standard to DIN E19258
JOG	JOG speed or input for JOG speed
KTY	"Linear" temperature sensor in the motor winding
LECOM	Lenze Communication
LEMOC2	PC program for Lenze controllers - DOS
LU	Undervoltage
Master	A master is for instance a PLC or PC.
OU	Overvoltage
PC	Personal Computer
PLC	Programmable logic controller
PM	Permanent magnet
Process data	For instance, setpoints and actual value which are to be exchanged as quickly as possible. Usually, this applies to smaller data amounts which are transmitted cyclically. With PORFIBUS these data are transmitted via the logic process data channel.
PROFIBUS	Communication standard DIN 19245, consisting of three parts
PTC	PTC thermistor with defined tripping temperature
QSP	Quick stop
RFG	Ramp function generator
Slave	Bus participant that must wait for the master's request to send data. Controllers are slaves.
SSC	Sensorless speed control
SSI	Synchronous serial interface
Target position	The target which is to be approached by means of a defined traversing profile.
TKO	Thermal contact / normally closed contact

Glossary

18 Table of keywords

A

Absolute value generator (ABS), 7-49

Accessories, 13-4

Addition block (ADD), 7-50

Additional setpoint, 7-145

Additional torque setpoint, 7-132

Aggressive gases, 4-1

Analog input (AIN), 7-56

Analog output (AOUT), 7-62

AND link (AND), 7-58

Application as directed, 1-2

Application examples, 15-1
- Cut register control, 5-2

Arithmetic blocks (ARIT), 7-64

Assembly, with fixing rails or brackets, 4-2

Automation, 12-3

Automation interface, 4-27

Automation interface (AIF-IN), 7-51

Automation interface (AIF-OUT), 7-54

B

BCD decade switch, 15-8

Brake unit, 4-17

Bus connection, 4-26

C

Cable cross-sections, 3-5, 4-14
- Control cables, 4-20
- Mains connection, 4-13
- Motor connection, 4-17

Cable specification, 4-12

CAN, 7-73

CANopen, 4-26

CE mark, 1-3

Change of parameter set (PAR), 7-98

Changeover switch for analog signals (ASW), 7-68

Characteristic function (CURVE), 7-91

Chopping frequency change-over, 7-136

Code table, 7-186

Collective screen plate, 4-20

Commissioning, 5-1
- Controller, 5-4
- Initial switch-on, 5-1

Comparator (CMP), 7-84

Conditioning of the setpoint speed (NSET), 7-141
- Additional setpoint, 7-145
- JOG setpoints, 7-143
- Main setpoint, 7-142
- S ramp, PT1 element, 7-145
- Setpoint inversion, Ramp generator, main setpoint, 7-144

Configuration, 7-1
- Function blocks, 7-4
- Global Drive Control, 7-2
- Monitoring, 7-180
- Predefined configurations, 7-1
- Table of attributes, 7-230

Connection
- Brake unit, 4-17
- Connection diagram, 4-22
- Control cables, 4-20
- Mains, 4-13
- Motor, 4-15

Connection diagrams, 4-22

Connections, Power, 4-13

Control cables, 4-20

Control characteristic, 7-150

Control connections, 4-20

Control of the controller (DCTRL), 7-95

Table of keywords

Control terminals, 4-20
- max. permissible cross-sections, for motor connection, 4-20
- Overview, 4-20
- Protection against inverse polarity, 4-20
- Terminal assignment, 4-20

Controller, 1-1
- Adapted to motor, 5-8
- Application as directed, 1-2
- Cold plate technique, 4-6
- Labelling, 1-2
- Mains adaptation, 5-7
- Switch on, 5-4

Controller inhibit (CINH), 7-97

Controller protection, Current derating, 6-4

Cooling air, 4-1

Current controller, 7-132

Current derating, 6-4

Current operated protections, 4-9

Cut register control, 5-2

CW-CCW-QSP link (R/L/Q), 7-158

D

DC bus connection of several drives, 10-1

Dead band (DB), 7-94

Definitions, 1-1

Delay element (PT1), 7-157

Delay elements (DIGDEL), 7-112

Derivative-action element (DT1), 7-117

DFIN, 7-25

Digital frequency input (DFIN), 7-99

Digital frequency output (DFOUT), 7-108

Digital frequency processing (DFSET), 7-105

Digital frequency ramp generator (DFRFG), 7-102

Digital inputs (DIGIN), 7-115

Digital outputs (DIGOUT), 7-116

Digital status signals (STAT), 7-170

Dimensions, 3-6
- Standard units, 4-2

Drive system, 1-1

E

EC Directives, 1-3
- Electromagnetic Compatibility, 1-5
  - CE-typical drive system, 1-5
  - Considered standards, 1-6
  - Declaration of Conformity, 1-6
- Low-Voltage, 1-4
  - Considered standards, 1-4
  - Declaration of Conformity, 1-4
- Machinery, 1-8
  - Manufacturer's Declaration, 1-8

Edge evaluation (TRANS), 7-172

Electrical data
- Types 9321 to 9325, 3-3
- Types 9326 to 9332, 3-4

EMC
- Assembly, 4-33
- CE-typical drive system, Installation, 4-33
- Filters, 4-33
- Grounding, 4-33
- Installation, 4-33
- Screening, 4-33

Encoder connection, 4-31

F

FAIL-QSP, 7-181

Fault elimination, 8-1

Fault messages, 8-6
- Reset, 8-10

Feedback signals, 4-29
- Encoder connection, 4-31
- Resolver connection, 4-30
- Temperature monitoring, 4-28

Field weakening, 7-135

Fieldbus, 15-9

Fieldbus module, 7-51

Flipflop (FLIP), 7-127

Free codes (FCODE), 7-119

Free digital outputs (FDO), 7-120

Free piece counter (FCNT), 7-118

Free space, 4-1

Freely assignable input variables (FEVAN), 7-122

Function blocks, 7-4
- Absolute value generator(ABS), 7-49
- Addition block (ADD), 7-50
- Analog input (AIN), 7-56
- Analog output (AOUT), 7-62
- AND link (AND), 7-58
- Arithmetic blocks (ARIT), 7-64
- Automation interface (AIF-IN), 7-51
- Automation interface (AIF-OUT), 7-54
- Changeover switch for analog signals (ASW), 7-68
- Characteristic function (CURVE), 7-91
- Comparator (CMP), 7-84
- Conditioning of the setpoint speed (NSET), 7-141
- Configuration code, 7-5
- Connection, 7-6
- Control of the controller (DCTRL), 7-95
  - Change of parameter set (PAR), 7-98
  - Controller inhibit (CINH), 7-97
  - Operation inhibited (DISABLE), 7-97
  - Quick stop (QSP), 7-96
  - TRIP-RESET, 7-97
  - TRIP-SET, 7-97
- Create connections, 7-8
- CW-CCW-QSP link (R/L/Q), 7-158
- Dead band (DB), 7-94
- Delay element (PT1), 7-157
- Delay elements (DIGDEL), 7-112
- Derivative-action element (DT1), 7-117
- Digital frequency input (DFIN), 7-99
- Digital frequency output (DFOUT), 7-108
- Digital frequency processing (DFSET), 7-105
  - Gearbox factor, 7-106
  - Phase offset, 7-106
  - Phase trimming, 7-106
  - Speed trimming, 7-106
  - Speed-proportional phase setting, 7-107
  - Stretch factor, 7-106
  - Synchronization, 7-107
- Digital frequency ramp generator (DFRFG), 7-102
  - Phase difference, 7-104
  - Profile generator, 7-102
- Digital inputs (DIGIN), 7-115
- Digital outputs (DIGOUT), 7-116
- Digital status signals (STAT), 7-170
- Display code, 7-6
- Edge evaluation (TRANS), 7-172
- FCODE strobe, 7-119
- Flipflop (FLIP), 7-127
- Free codes (FCODE), 7-119
- Free digital outputs (FDO), 7-120
- Free piece counter (FCNT), 7-118
- Freely assignable input variables (FEVAN), 7-122
- Holding brake (BRK), 7-69
  - Close brake, 7-70
  - Open brake, 7-70
  - Setting controller inhibit, 7-71
- Homing function (REF), 7-158
- Input name, 7-5
- Input symbol, 7-5
- Internal motor control (MCTRL), 7-130
- Inverter (ANEG), 7-61
- Limiter (LIM), 7-129
- Logic NOT (NOT), 7-139
- Motor potentiometer (MPOT), 7-137
- Names, 7-5
- OR operation, 7-146
- Output name, 7-6
- Output symbol, 7-6
- Parameter setting code, 7-6
- Phase comparator (PHCMP), 7-152
- Phase conversion (CONVPHA), 7-90
- Phase integrator (PHINT), 7-154
- Phase signal adaptation (PHDIV), 7-153
- Process controller (PCTRL1), Dancer position, tension, pressure controller, 7-149
- Ramp generator (RFG) , 7-165
- Register control, 7-22
- Remove connections, 7-9
- S-shaped ramp generator (SRFG), 7-168
- Sample and hold function (S&H), 7-167
- Signal conversion (CONV), 7-88
- Signal types, 7-4
- State bus connection, 7-171
- System bus (CAN-IN), 7-73
- System bus (CAN-OUT), 7-80

Fuses, 3-5
- Mains connection, 4-14

Table of keywords

G

GDC
- Offline operation, 5-5
- Online operation, 5-5
- Switch on, 5-5

Gear Control, 7-41

Gearbox factor, 7-106

Global Drive Control, 7-2
- Diagnostics, 8-1
- Status indications, 6-2

Glossary, 17-1

H

History buffer, 8-3
- Structure, 8-3
- Working with, 8-4

Holding brake (BRK), 7-69

Homing function (REF), 7-158
- Homing modes, 7-161
- Profile generator, 7-159

Homing modes, 7-161

I

Information on operation, 6-3

Inputs
- analog, 4-21
- digital, 4-21

Insetter, 15-10

Installation
- CE-typical drive system, 4-33
  - Filters, 4-33
  - Grounding, 4-33
  - Screening, 4-33
  - Structure, 4-33
- Cold plate, 4-6
- Electrical, 4-9
- Mechanical, 4-1
- Standard assembly, 4-2

Insulation, 4-10

Internal motor control (MCTRL), 7-130
- Additional torque setpoint, 7-132
- Current controller, 7-132
- Limiting of speed setpoint, 7-134
- Phase controller, Phase controller influence, 7-134
- Quick stop (QSP), 7-135
  - Chopping frequency change-over, 7-136
  - Field weakening, 7-135
- Speed controller, 7-133
- Torque control, with speed limit, 7-133
- Torque limiting, 7-132

Inverter (ANEG), 7-61

J

JOG setpoints, 7-143

Jumper, Analog setpoint selection, 4-21

K

Keypad, Status indications, 6-1

L

Labelling, Controller, 1-2

LECOM, Status word C0150, 8-2

Legal regulations, 1-2

Liability, 1-2

Limiter (LIM), 7-129

Limiting of speed setpoint, 7-134

Logic NOT, 7-139

Table of keywords

M

Main setpoint channel, 7-142
Mains, Controller adaptation, 5-7
Mains conditions, 4-12
Mains connection, 4-13
  Protection, 4-14
Mains filter, 3-6
Mains types, 4-12
Maintenance, 9-1
Manufacturer, 1-2
Master encoder signal, 7-25
Mechanical installation, 4-1
Message, 7-180
Messages, Fault, 8-6
Monitor output, 4-21
Monitoring
  Contouring error, 7-45
  Cylinder pulse, 7-44
  FAIL-QSP, 7-181
  Label, 7-44
  Line speed, 7-45
  Message, 7-180
  Monitoring functions, 7-182
  Off, 7-180
  Reactions, 7-180
  Register difference, 7-45
  Setting of reactions, 7-181
  TRIP, 7-180
  Warning, 7-180
Monitorings, 7-180
Motor, Selection list, 7-244
motor, Controller adaptation, 5-8
Motor cable, Screening, 4-15
Motor connection, 4-15, 4-16
Motor control, 7-27
Motor potentiometer (MPOT), 7-137
Motor protection, 4-11
Motors, 13-4
Mounting, 4-1

O

Operating conditions, 3-2
Operating module, Status indications, 8-2
Operation, 6-1
Operation inhibited (DISABLE), 7-97
OR operation, 7-146
Oscillations, 4-1
Outputs
  analog, 4-21
  digital, 4-21

Table of keywords

P

Parameter
- Change, 7-176
- PC program, 7-175
- Set generation, 5-7
- Transfer, 7-177
- Ways of parameterization, 7-175

Parameter set, Generation, 5-7

Parameter setting, 7-175

Password protection, 7-179

PC, Switch on, 5-5

PC program, 7-175

Phase comparator (PHCMP), 7-152

Phase controller, Phase controller influence, 7-134

Phase conversion (CONVPHA), 7-90

Phase difference, 7-104

Phase integrator (PHINT), 7-154
- constant input value, 7-155
- Scaling of PHINTx-OUT, 7-156

Phase offset, 7-106

Phase signal adaptation (PHDIV), 7-153

Phase trimming, 7-106

Power connections, 4-13
- Max. permissible cross-sections
  - for mains connection, 4-13
  - for motor connection, 4-17

Process controller (PCTRL1)
- Control characteristic, 7-150
- Dancer position, tension, presure controller, 7-149
- Ramp generator, 7-151

Profile generator, 7-102, 7-159

Protection against contact, 4-10

Protection against inverse polarity, 4-20

Protection of persons, 4-9
- Insulation, 4-10
- Residual-current circuit breaker, 4-9

Push-through technique, 4-3

Q

QSP (quick stop), 7-135

Quick stop (QSP), 7-96, 7-135

R

Ramp generator, 7-151

Ramp generator (RFG), 7-165

Rated data
- Cable cross-sections, 3-5
- Fuses, 3-5
- Mains filter, 3-6
- Types 9321 to 9325, 3-3
- Types 9326 to 9332, 3-4

Register control, 7-22
- Activation, 7-38
- Analog signals, 7-23
- Applications, 7-18
- Automatic window correction, 7-35
- Basic gearbox factor, 7-41
- Basic material tension, 7-40
- Coarse register, 7-42
- Coating station, 15-11
- Contouring error, 7-26, 7-45
- Control characteristic, 7-38
- Control/status word, 7-46
- Cross-cutter, asynchronous, 15-2
- Cut accuracy, 15-4
- Cut format, 15-2
- Cut format (CF), 7-29
- Cylinder label, 7-30
- Cylinder label error, 7-44
- Dead time compensation, 7-33
- Digital signals, 7-23
- Display codes, 7-47
- Examples, 15-1
- Feedback system, 15-4
- Gear control, 7-41
- Generation of the actual register value, 7-32
- Initialization, 7-30
- Interference pulses, 7-48
- Introduction, 7-18
- Key functions, 7-18
- Label, 7-29
- Label window, 7-34
- Label window width, 7-34
- Labelling station, 15-12
- Manipulated phase value, 7-26
- Mark, 15-2
- Master encoder position, 15-3
- Master encoder speed, 7-45
- Master value resolution, 15-3
- Material, 15-2
- Material length trimming, 7-40
- Measuring system, 7-28
- Monitoring of the label detection channels, 7-44
- Phase setting mode, 7-38
- Phase signals, 7-25
- Phase trimming, 7-43

Table of keywords

Plausibility check, 7-44
Print format, 15-2
Print format (PF), 7-29
Product parameters, 15-5
Register differences, 7-36
Register mark sensor, 15-5
Register trimming, 7-39
Selection of the direction of rotation, 7-28
Set-up procedure, 7-30
Setpoint speed, 7-26
Signal jitter, 7-48
Speed signals, 7-25
Tension control (insetter), 15-10
Zero register, 7-30

Reset, Fault message, 8-10

Residual-current circuit breaker, 4-9

Resolver connection, 4-30

S

S ramp, PT1 element, 7-145

S-shaped ramp generator (SRFG), 7-168

Safety information, 2-1

Sample and hold function (S&H), 7-167

Screening
Control cable, 4-20
EMC, 4-33
Motor cable, 4-15

Selection list, 7-225

Servo. *See* Controller

Set integral component, 7-133

Setpoint inversion, Ramp generator, main setpoint, 7-144

Signal conversion (CONV), 7-88

Signal flow charts, 16-1

sin(2)-shape, 7-168

Speed controller, 7-133
Set integral component, 7-133

Speed trimming, 7-106

Speed-proportional phase setting, 7-107

State bus, 4-25

State bus connection, 7-171

Status indications, 8-2
Global Drive Control, 6-1
Keypad, 6-1

Status word, 8-2

Stretch factor, 7-106

Switch on, 5-1
Controller, 5-4
GDC, 5-5
PC, 5-5

Switching on the motor side, 4-17

Synchronization, 7-107

System bus, 15-6

System bus (CAN-IN), 7-73

System bus (CAN-OUT), 7-80

System bus components, 15-8

Table of keywords

T

Table of attributes, 7-230

Technical data, 3-1
- Dimensions, 3-6
- Electrical data, 3-3
- Features, 3-1
- General data/operating conditions, 3-2

Temperature monitoring, 4-28

Tension control, 15-10

Thermal separation , 4-3

Tightening torques
- Control terminals, 4-20
- Power terminals, 4-13, 4-17

Torque control, with speed limit, 7-133

Torque limiting, 7-132

Touch probe, 7-107

TRIP, 7-180

TRIP-RESET, 7-97

TRIP-SET, 7-97

Troubleshooting, 8-1

U

Use, as directed, 1-2

V

Vibrations, 4-1

Voltage drop, 4-14

W

Warning, 7-180

Warranty, 1-2

Waste disposal, 1-2

Z

Zero track, 7-107

Table of keywords

Table of keywords

Show/Hide Bookmarks

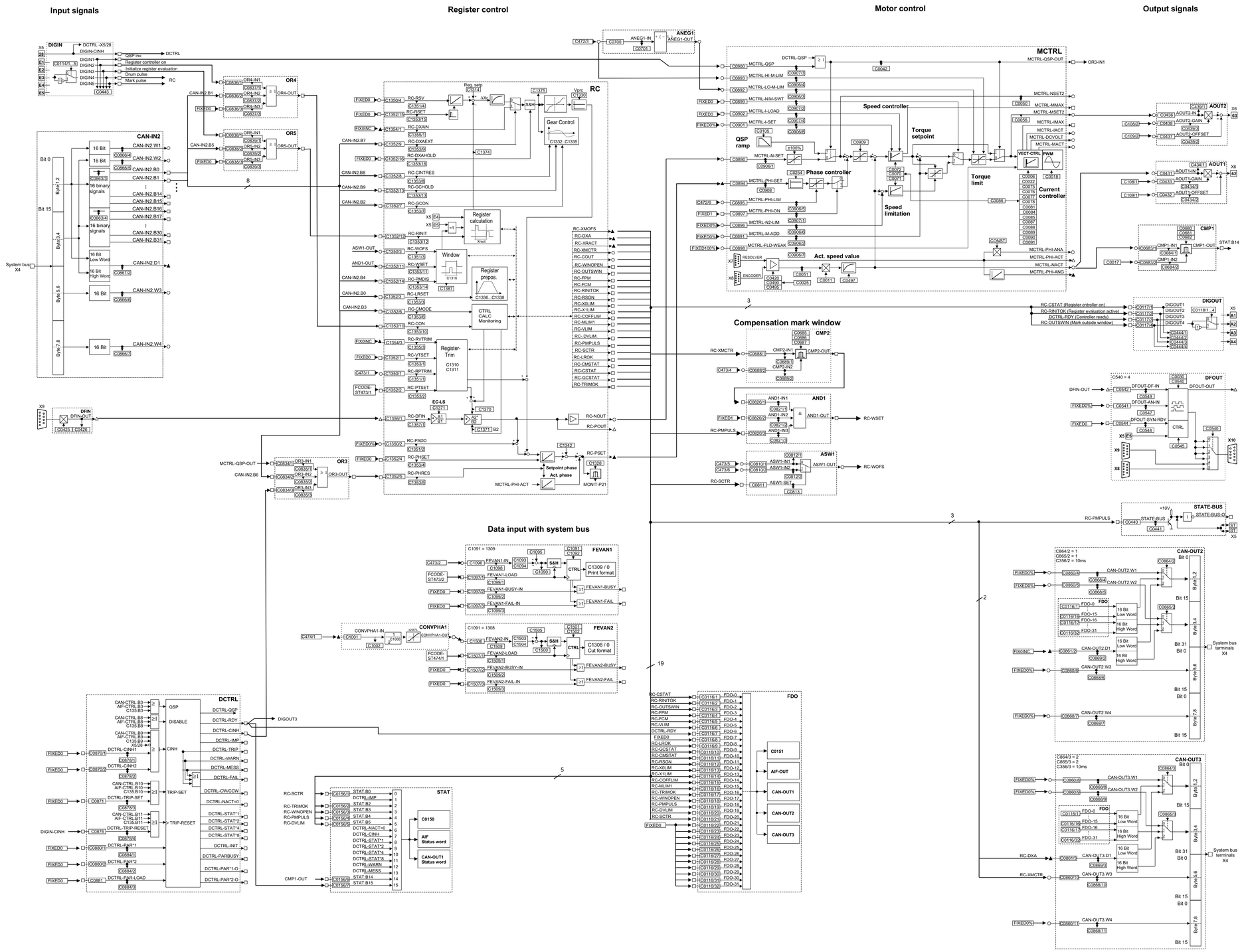

Configuration: 30000 Registe Control Standard

Show/Hide Bookmarks

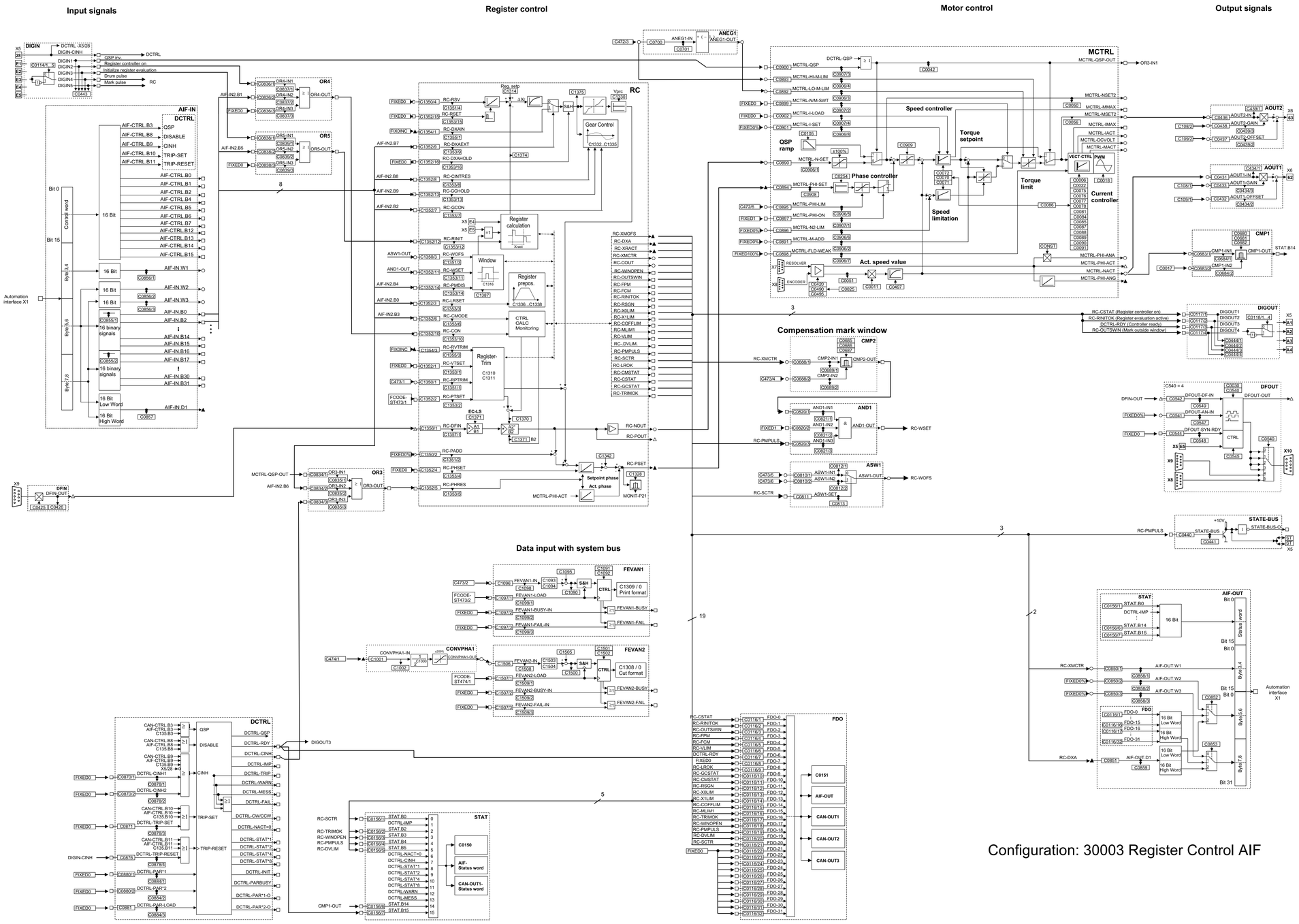

Configuration: 30003 Register Control AIF

Show/Hide Bookmarks

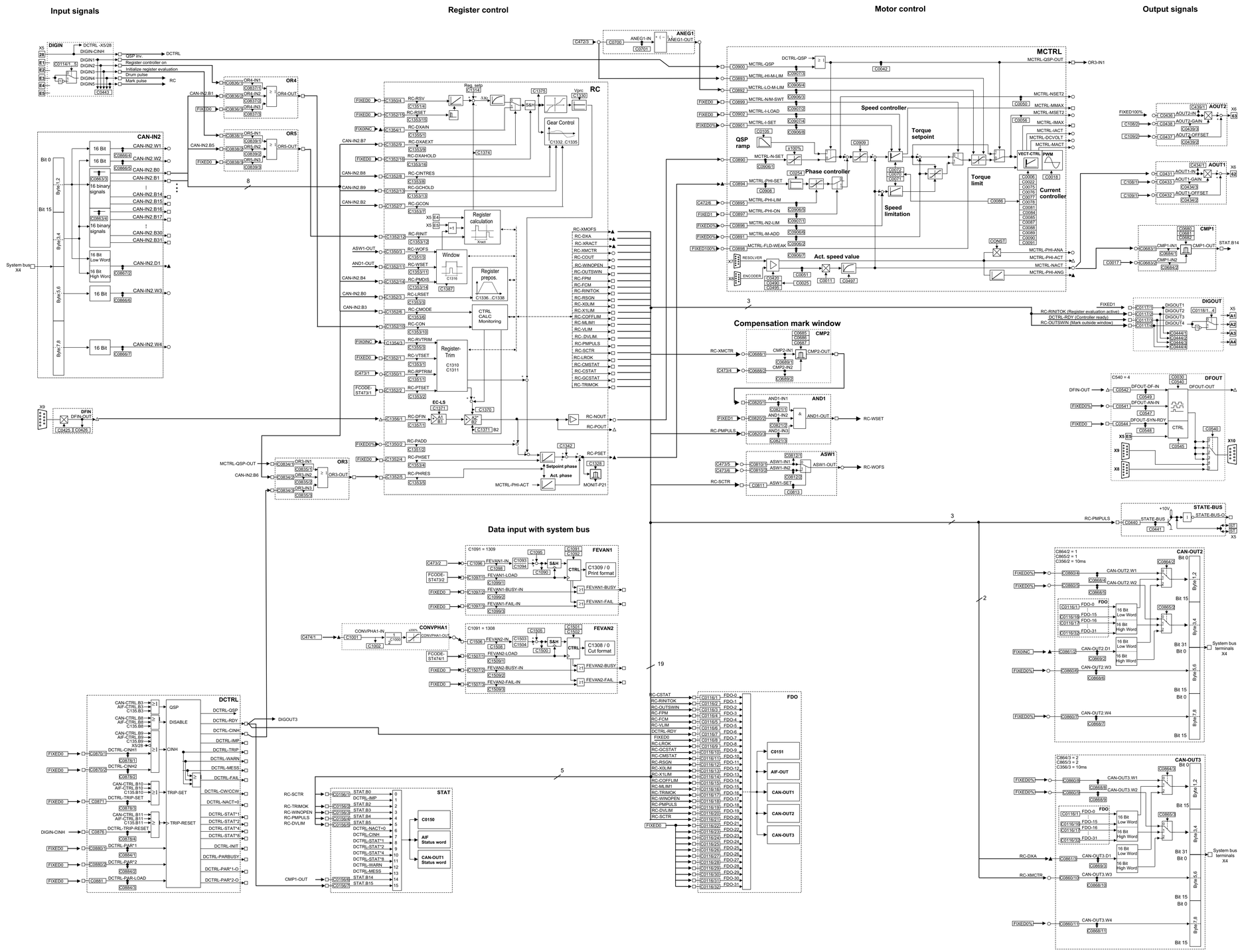

Configuration: 30010 Register Control Standard /
Internal Terminal Supply

Show/Hide Bookmarks

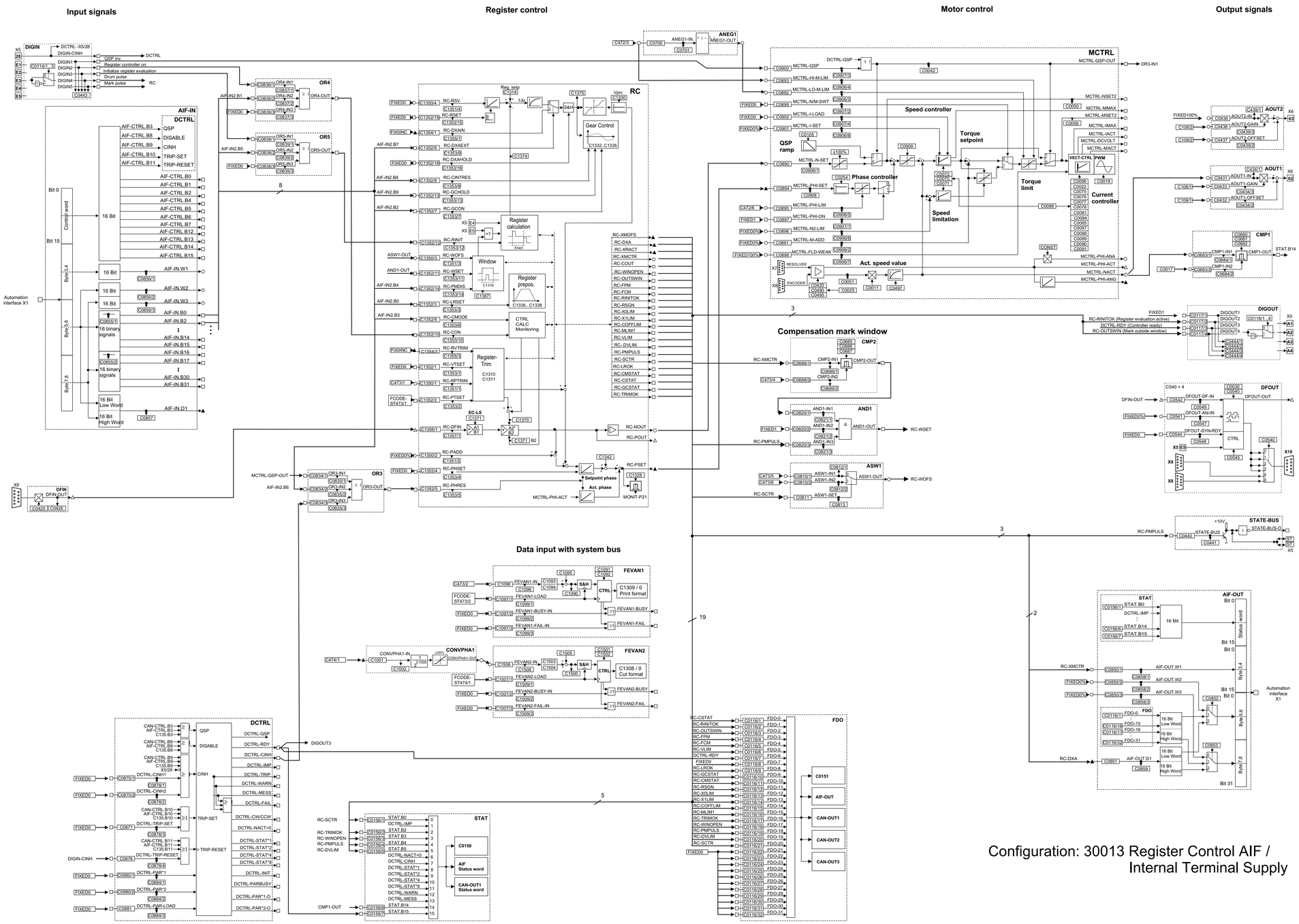

Configuration: 30013 Register Control AIF / Internal Terminal Supply